Jacob®

MEASURING AND CONTROLLING DEVICES



Content

	Page
General and functional description	5
Float switches	15
Indicators and Controls	93
Pressure Sensors Temperature Sensors	99
Conductive Level Electrodes	103
Magnetic switches	113
Terms of sales, delivery and payment	143

Delivery program

Float switches

Probably, float switches are the most popular level monitoring devices. The clear and easily understandable function leads to increasing and new fields of use. In spite of the continuous electronic progress, these easy to handle devices defend their position on the market – even without complicated electronics. The common implementation of float switches is mainly due to the possibility to realize materials (acid-proof or also alkali-proof) and temperature ranges which are tailored to the individual needs of the customers.



Level measuring devices

In addition to the float switches, we also included bar probes in our delivery program in order to expand the area of the level measuring. These level probes serve – in combination with transistor control relays – for the automatic control of conductive liquid levels.

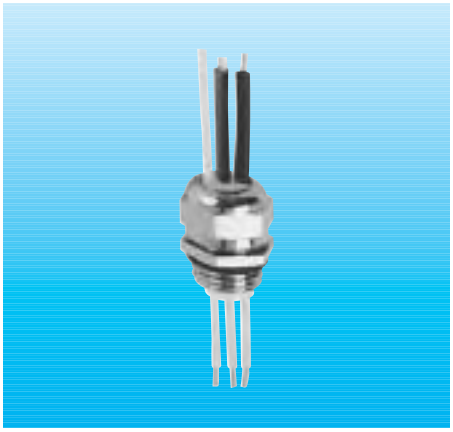

Magnetic switches

Magnetic switches offer one decisive advantage for the user: regardless of the voltage fed (between 0 and 230 V) it is possible to operate the switches without potential (floating). This plays an important role, in particular in the security area. Furthermore, magnetic switches are used in the whole sector of mechanical engineering as a low-cost alternative for the known inductive capacitance switches. Special structural shapes are implemented as motional switches in pressure plants and for the control of the soiling in filtering installations.

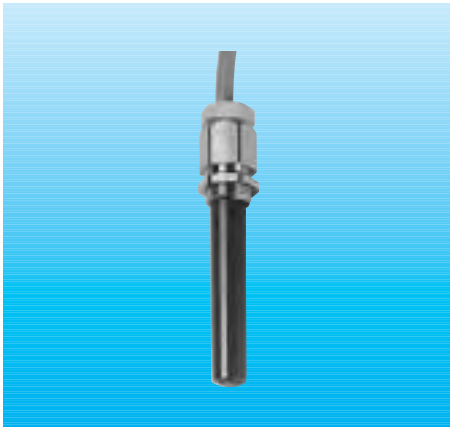

Temperature probes

A lot of the liquid levels which are used in the float switches or level measuring devices are also temperature controlled. In addition to the possibility to install the temperature probes or temperature diodes into the float switches, we have included temperature probes in our delivery program which can be separately installed. By doing so, we want to comply with the wishes of our customers who want their bathrooms not only to be level controlled, but also temperature controlled.



Mistakes and omissions excepted, subject to change without notice.

General and functional description of a float switch

The most simple type of a float switch consists of a slide tube, a float with a permanent magnet, a reed switch with a cable soldered onto it and a screw connection in order to fix the float switch at the designated location. This can be practiced at any container for liquid media, regardless of its type.

Of course, float switches can be manufactured in the most extraordinary versions. Unfortunately, we cannot list or even explain all the possibilities here, because in the case of our float switches most parts can be combined. So, for example, a float switch with a PVC slide tube, a brass screw connection and special steel float can be installed. The following combination is also possible: brass slide tube, special steel screw connection and PVC float. Thereby, not only the materials are exchangeable, but also the dimensions of the single components can vary. In fact, the possible combinations are restricted only by physical limits.

Three different functions are possible: normally open contact, normally closed contact or change-over contact, which means that the reed switch changes from the normally closed contact to the normally open contact (one circuit is opened, another one closed).
These functions are triggered by the buoyancy of the float which moves up or down with the surface of the medium. If the float has reached the lower stop, then the contact is - according to the preset values - opened or closed. If the medium rises it takes the float to the top. If a reed contact which is located at a preset position within the slide tube is reached during this process, then the reed contact is actuated by means of the magnetic field of the permanent magnet which is contained in the float.

This contact function is maintained as long as the float remains in this position OR floats up. If the level falls and the float moves to the bottom, then the reed contact falls back into its home position when the float has sunk below the abovementioned position.
This so-called overrun of the switching point is practiced when the float should actuate a second switching point. Thereby, the functional procedure corresponds exactly to the one of the switching point which was reached first with the only exception that in this case the way of the float is limited by an upper stop. If the float moves up further, then the reed contact will also fall back into its home position. This is, however, undesirable and would lead to incorrect measuring results. Therefore, another float is needed for a potential third switching point which then, however, is able to actuate a fourth switching point.

Appliances working with reed contacts like, for example, our float and magnetic switches, offer in many respects advantages which should not be underestimated when compared with devices which work in capacitive or inductive manner. For example, all switches with reed contacts are FLOATING. They offer very high SWITCHING CAPACITIES and a HIGH DEGREE OF RELIABILITY, they are LONG-LASTING when correctly used and – a factor which nowadays is more important than ever – they are a LOW-COST RELIABLE CIRCUIT ELEMENT.

If the level in a tank, container, barrel or the like is to be monitored more accurately, we can offer a range of
CONTINUOUSLY MEASURING
FLOAT SWITCHES.

These float switches work according to the principle of a step switch.

According to the type, every 5 mm or every 10 mm a different electrical signal is released and processed in an analyzer. This analyzer turns these electrical signals into an optical display. The most simple way to display a level is in >> % <<, and this is certainly sufficient in most cases. If the display, however, should be more accurate and include also >>LITRE<< or >>DECILITRE<< and the like, our program contains also some indicators and analyzers for such cases.

We have made it our business to manufacture float switches and the relating components which are tailored to the needs and requirements of our customers. Therefore, we are able to offer customer specific solutions.

Assembly

The assembly of the float switch is performed, according to the appropriate screw connection, either from the top or from the bottom into the cover or bottom of the container. In general it must be ensured, however, that there remains a lateral distance of approximately 20 mm. The position of the stop rings of the floats must not be changed. If the position has been changed, it must be adjusted such that the float can cover a way of 3-5 mm from the on or off position to the stop ring.

Mistakes and omissions excepted, subject to change without notice.

Please request separate documents with respect to quenching and screening units.

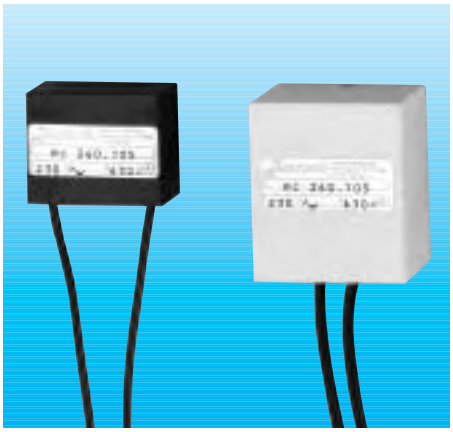

Mistakes and omissions excepted, subject to change without notice.

General

We have enclosed a drawing for each float switch type in order to facilitate the ordering process for you. Thus, you just have to take out the corresponding page and make a copy. On this copy, you can easily write down all details which vary from the standard program. This means you can combine the components of the float switch as it must be produced for your individual application. Furthermore, you can easily recognize the type number resulting from your combination by help of the type code.

The following are important factors for your order:

1. Selection of the material
2. Number of the required switching points
3. From which side do I have to install the float switch: from the top, from the bottom, or from the side?
4. Which switching point has which switching status when there is NO liquid in the container?
5. How long must the float switch be?
6. What is the required position of the single switching points?
7. Which screw connection is possible and suitable?

The minimum distances from the end of the slide tube to the first switching point are indicated on the corresponding page of the catalogue. Please remember that the depth of immersion of the float decreases when the density of the medium increases, and thus, the switching point is shifted correspondingly to the bottom. Vice versa, the float immerses, of course, deeper and deeper when the density of the medium decreases. Therefore it is recommended to choose the float in such a way that the buoyancy value of the float is at least 0.1 times higher than the density of the medium. In case of viscous media the factor 0.5 is recommended. Our indications are based on a density of the medium = 1 (water).

In practice, it often happens that the media to be monitored are highly agitated, e.g. in stirring devices or coolant containers where a permanent circulation is required. In view of theses special fields of use we have the possibility to equip our float switches, regardless of their structural shape, with a protecting tube. Thereby it is evitated that the medium begins to hunt in the vicinity of the float or is exposed to waving. Thus, undesired switching pulses and malfunctions can be avoided to a large extent. A desired side effect of the protecting tube: coarse soil particles cannot come into contact with the float and cause malfunctions.

Our product range covers not only the float and magnetic switches described in this catalogue, but also a series of customer specific solutions. However, it would go beyond the limits of this catalogue to list all of these solutions. Please do not hesitate to call us if you should not find the appropriate solution for your application in spite of the broad range of types contained herein. We will be pleased to advise you and to find – in close cooperation with yourself – a practicable and cost effective solution.

We do not want to promise, but to CONVINCE.

Mistakes and omissions excepted, subject to change without notice.

Electrical connection

With respect to the electrical connection, in particular the provisions of DIN VDE 0100 Part 610 are to be complied with. Dependent upon the load, the connection can be performed directly at the float switch or by insertion of a contact protective relay or a contactor. The contacts have the following contact indexes. The contacts have the specified contact position when the float has not yet been lifted by the liquid. The arrow in the contact drawings indicates in which direction the mobile contact stud moves, i.e. precipitously switches, when the liquid rises.

Thereby it must be noted that the stop rings have to be remounted in such a way that the float can cover a way of 3-5 mm from the on position to the stop ring. The same way is required for the off position. The connection of the wires is to be performed according to the following examples. In case of float switches with green-yellow wire, the wire is to be connected with the protective conductor.

e.g. Type	Make contact = 1 250.001 Normally open = 1	Break contact = 2 253.002 Normally closed = 2	Change-over contact = 3 252.003 Changeover = 3
Contact at L_1	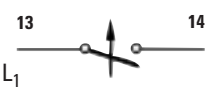		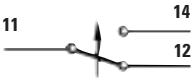

Devices with 2 switching points

e.g. Type	250.012	254.031	260.033
Contact at L_3			
Contact at L_2		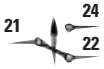	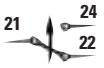
Contact at L_1			

Devices with 3 switching points

e.g. Type	252.111	262.112	264.221
			
		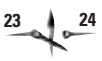	
			

Connection examples

The following figures show the flow diagrams for empty containers for a container **filling pump** without and with overcharge protection.

Filling pump, e.g. with 250.022

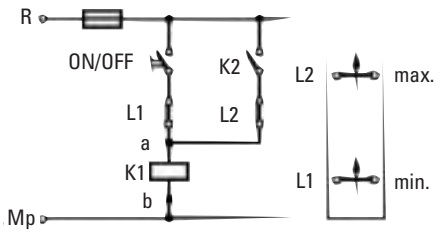

Filling pump with overcharge protection, e.g. with 250.222

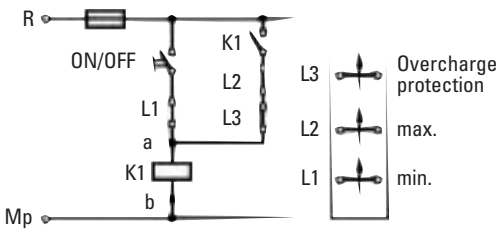

Mistakes and omissions excepted, subject to change without notice.

The following examples show the flow diagrams for empty containers for a container **evacuation pump** without and with dry-running protection.

Evacuation pump, e.g. with 250.011.00

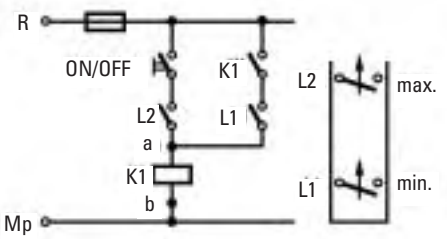

Evacuation pump with dry-running protection, e.g. with 250.111.00

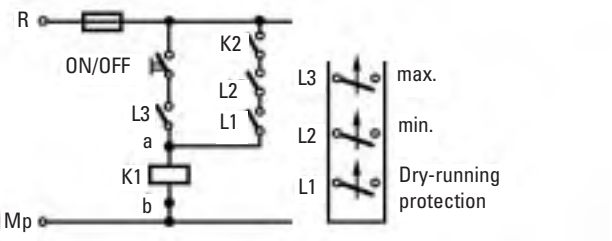

The following figures show the connection diagrams for the float switches with coupler plug.

z.B. **256.001.00** **256.002.00** **256.003.00**

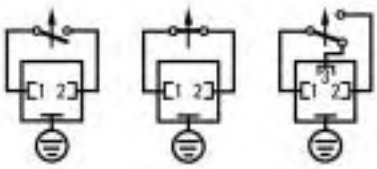

256.011.00 **256.022.00** **256.012.00**

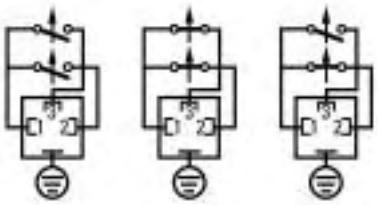

256.111.00

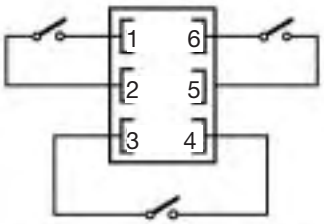

256.033.00

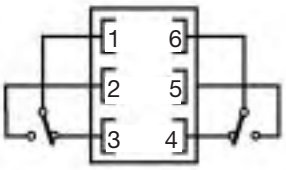

Mistakes and omissions excepted, subject to change without notice.

Switching capacity

In case of switching large currents of inductive consumers, such as magnetic valves, contactors, etc., high switching voltages and, in connection therewith, switching sparks develop which reduce the lifetime of the contacts. In such cases we recommend:

1. to use the contact protective relay type no. 270.751 or 270.752, or
2. to parallel connect a RC module or a voltage-dependent resistor (VDR) to the load in case of alternating and direct voltages or a diode in case of direct current.

The contact protective relay offers the advantage that only one extra-low voltage is led to the float switch which is electrically isolated and can handle a high current.

The figures show the reliable switching capacity dependent upon the switching voltage. In case of direct voltage the contacts can only be charged with approximately 60% of the specified switching capacity.

Normally open contact/normally closed contact

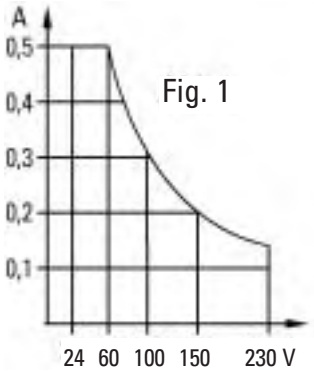

Fig. 1

Change-over

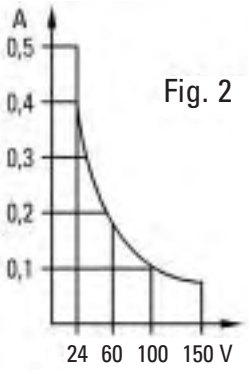

Fig. 2

Type series 350 - 397

Normally open contact/normally closed contact

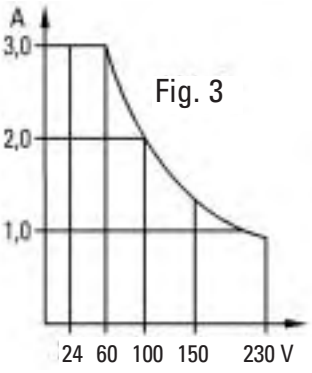

Fig. 3

Change-over

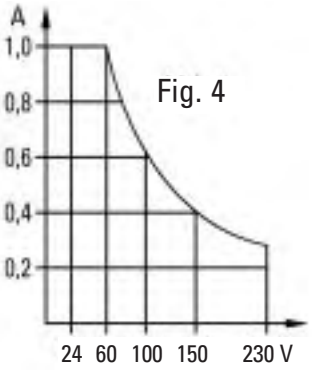

Fig. 4

Type series 250 - 299

Special model

1. Upon request, the float switches are delivered with a longer connection cable.

2. From 90°C upwards, we recommend to order the float switches with silicone cable. The type series 260 and 290 with silicone cable and screw connections made of 1.4571 or brass can be used up to 150°C.

3. Instead of the screw connections und floats designated for the standard models, these parts can also be delivered in other materials.

4. In case of float switches with a float tube of special steel or brass and connection head, 4 normally open contacts/normally closed contacts or 3 change-overs can be installed.

5. Float switches with normally open contacts/normally closed contacts with a flashover voltage of 1000 Volt are available.

Mistakes and omissions excepted, subject to change without notice.

Description of the plastics

Polyvinyl chloride (PVC)

Thermoplastic synthetic material, rigid in non-softened state, elastomer, if the compound contains processing oils, cannot be vulcanized, weldable.

Temperature range

Should not exceed +60°C, depending upon mechanical stress and type of the compound / depending upon the type of the used softener it volatilizes at higher temperatures.
PVC HT suitable for up to +90°C.
(High-temperature polyvinyl chloride)

Advantages

Variable in its properties, especially in its softness, by mixing in different additives/ medium elasticity can be reached / non-ageing and ozone-proof / high chemical resistance / oil resisting to a limited extent / good mechanical solidity / good electrical insulating property / cost-effective / not burning in its own flame

Disadvantages

Mechanical properties are highly dependent upon the operating temperature / according to the compound it becomes rigid to brittle at very low temperatures / depending upon the quality possibility of migration of the softener, i.e. possible changes of colour and hardness due to the contact with identical and other materials, lacquered surfaces, etc. (can be reduced by using more expensive compounds) / soft: hardens in benzine and oil

Polyamides (PA)

A group of thermoplastic synthetic materials, firstly known as Nylon (DuPont, USA) and Perlon (Germany), nowadays in different types (6, 11, 12, 6.6, 6.10) and of many origins (and fantasy names!) available which differ with respect to the chemical structure. Their characteristics open up various, broad fields of use, cannot be vulcanized. Specific gravity 1.07 up to 1.21.

Temperature range

- 40 up to +120° C
(Speciale waste up to +180° C)

Advantages

High tenacity and wear resistance (with normal water content), low coefficient of friction provides practically self-lubricating bearings / physiologically recognized as safe / good electrical isolator / resistant again organic solvents, mineral, animal and vegetable oils and fats, benzine, aromatic compounds

Disadvantages

According to the type, decline of the mechanical properties with decreasing water content / changes in the humidity content (8-10%) lead to volume changes/ not resistant against acids and alkaline solutions / combustible

Butadiene acrylonitrile rubber (NBR)

Synthetic rubber, polyacrylonitrile butadiene rubber, formerly Perbunan or Buna N, interlaced with sulphur.

Temperature range

-20 up to +100°C dry, hardens in hot-air oils up to +140°C, water up to +80°C

Advantages

High resistance against oil and benzine / high heat-proofness / good mechanical solidity / low permanent deformation under pressure

Disadvantages

Bad ozone and weathering resistance / little elongation / combustible

Polypropylene (PP)

Thermoplastic synthetic material belonging to the group of polyolefines, in generally used pure, i.e. not as a compound, not interlaced, weldable, specific gravity 0.90-0.91, rigid

Temperature range

0 up to +110°C

Advantages

Harder and more rigid than polyethylene/ high surface hardness / high form stability and no distortion at high temperatures / excellent electrical insulating property / does practically not absorb water / tasteless and inodorous / physiologically recognized as safe / good resistance against acids, alkaline solutions and solvents

Disadvantages

Decline of the mechanical properties with increasing temperatures / sensitive to low temperatures (embrittlement starts already at 0°C) / higher ozone and weathering resistance when dyed black / burns

Mistakes and omissions excepted, subject to change without notice.

Description of the plastics

Polyethylene (PE)

Thermoplastic synthetic material belonging to the group of polyolefines, in generally used pure, i.e. not as a compound, not interlaced, weldable, available in form of **low-density polyethylene** (LDPE, specific gravity 0.92) and **high-density polyethylene** (HDPE, specific gravity 0.95), rigid

Temperature range
LPDE: -50°C up to +85°C
HPDE: -50°C up to +95°C

Advantages
Unplastiziced / good, but rather lower mechanical solidity than PVC / excellent electrical insulating property / physiologically recognized as safe / higher resistance to breaking at low temperatures than PVC / tasteless and inodorous / good resistance against acids, alkaline solutions and solvents / relatively low-cost

Disadvantages
Mechanical properties depend upon temperature / only ozone and weathering resistant when dyed black; otherwise embrittles under such conditions / swells in oil and hydrogen chloride / burns

Polyacetate (POM)

Thermoplastic synthetic material, cannot be interlaced, Delrin (DuPont), POM-H = homopolymer, Hostaform C = copolymer (Hoechst) POM-C, a first-class construction material for machine parts instead of metals. Specific gravity 1.4

Temperature range
40°C up to +100° C

Advantages
High solidity and stiffness / excellent dimensional stability / elasticity and viscosity also at higher temperatures / good cutting workability / high resistance against chemicals and solvents

Disadvantages
Only limited oil resistance / not acidproof / sensitive to action of light / combustible

Polytetrafluor ethylene (PTFE)

Thermoplastic fluoroplastic, Teflon (DuPont, USA), Fluon (!C!), Hostaflon TF (Hoechst), is sintered at +360-400°C. Specific gravity 2.2

Temperature range
-200°C up to +260°C

Advantages
Unequalled with respect to resistance against solvents and chemicals and high temperature stability / excellent electrical insulator / good cutting workability / physiologically recognized as safe / not inflammable / weathering resistant / low coefficient of friction provides practically self-lubricating properties

Disadvantages
High price / average mechanical properties / limited fields of use, improvement with filling materials possible / injection moulding not possible / version Teflon-FEP can be thermoplastically processed / tendency to cold flow under mechanical stress / burns, but not in its own flame

Polyvinyldenfluorid (PVDF)

Thermoplastic synthetic material, can be thermoplastically processed from 300°C onwards. Specific gravity 1.78

Temperature range
-40°C up to +150°C

Advantages
Good mechanical stability under load and tensile strength / weathering resistant / very good chemical resistance / not easily inflammable / very high resistance against solvents and chemicals / high temperature stability

Disadvantages
High price / rather low dielectric quality / high specific gravity / difficult to be processed thermoplastically

Mistakes and omissions excepted, subject to change without notice.

Resistance of the building materials for float switches

The following table contains a summary of not binding standard values. These values are to be checked in each case before the application.

1. Excellent resistance
2. Good resistance
3. Average resistance
   The material can still be used after the contact with the chemical substance, but cannot resist a permanent contact.

X not resistant

	Name	Chemical total formula	PVC	PA	NBR	PP	PVC HT	PVDF	PTFE	VA Special steel	MS Brass
1	Acetone	C_3H_6O	X	1	X	1	X	X	1	1	1
2	Ethyl alcohol	C_2H_5OH	2	2	1	1	1	1	1	1	1
3	Ethyl acetate	$C_4H_8O_2$	X	1	X	X	X	2	1	1	X
4	Ethyl chloride	C_4H_5Cl	3	2	X	2	2	1	1	1	X
5	Ethylene glycol	$C_2H_6O_2$	3	–	2	2	2	2	1	1	3
6	Ethylene oxide	C_2H_4O	3	1	X	2	2	1	1	1	3
7	Allyl alcohol	C_3H_6O	X	1	X	1	X	1	1	1	1
8	Formic acid 20%	HCOOH	3	X	2	2	2	1	1	1	X
9	Aminobenzene	C_6H_5-NH_2	2	2	X	2	2	2	1	1	X
10	Ammonia (anhydrous)	NH_3	2	1	X	2	2	2	1	1	X
11	Ammoniacal gas liquor	$NH_3 + H_2O$	1	1	3	1	1	1	1	1	X
12	Benzine		1	1	1 – 2	3	1	1	1	1	1
13	Benzene	C_6H_6	X	1	3	3	X	1	1	1	1
14	Boric acid (hydrous solution)	H_3BO_2	1 – 2	2	1	1	1	1	1	1	X
15	Calcium hydrogen sulphite (hydrous solution)	$Ca(HSO_3)_2$	1 – 2	1	2	1	1	2	1	1	X
16	Calcium hydrate (hydrous solution)	$Ca(OH)_2 + H_2O$	1	1	1	1 – 2	1	1	1	1	X
17	Chloroform	$CHCl_3$	X	3	X	3	X	1	1	1	1
18	Chloric acid hydrous 10%	$HClO_3$	2	1	X	X	1	1	1	1	–
19	Diethyl ether	$C_4H_{10}O$	3	1	2	3	3	–	1	1	1
20	Dichloroethane	$C_2H_4Cl_2$	3	2	X	2	2	1	2	2	X
21	Diesel oil		2	1	1	2	2	1	1	1	2
22	Ferric chloride (hydrous solution)	$FeCl_3$	1	2 – 3	1	1	1	1	1	X	X
23	Mineral oil		2	1	1	2	2	1 – 2	1	1	2
24	Ethanoic acid 50%	CH_3COOH	3	X	3	1 – 2	3	2	1	1	X
25	Hydrogen fluoride (anhydrous)	HF	X	X	X	X	X	2	1	1	1
26	Hydrofluoric acid up to 40%	HF	X	X	X	2	3	1	1	X	X
27	Formaldehyde solution	$CH_2O + H_2O$	2	1 – 2	2	1	2	1	1	1	X
28	Heating oil		2	1	1	3	2	1	1	1	2
29	Hydrazine and hydrous hydrazine solutions	N_2H_4	2	–	2	3	2	2	1	X	X
30	Caustic potash solution	$KOH + H_2O$	1	1	1	1	1	1	1	1	X
31	Isopropanol	C_3H_8O	2	1	2	1	2	1	1	1	1
32	Carbon dioxide	H_2CO_3	2	1	1	1	1	1	1	1	X
33	Magnesium chloride (hydrous solution)	$MgCl_2ÝH_2O$	2	1	1	1	1	1	1	X	X
34	Magnesium sulphate (hydrous solution)	$MgSO_4Ý7H_2O$	2	1	2	1 – 2	1 – 2	1	1	1	X
35	Seawater	H_2O	2	1	1	2	2	1	1	2	3
36	Methanol	CH_4O	2	1 – 2	1	1	1	1	1	1	1
37	Methylene chloride	CH_2Cl_2	X	2 – 3	3	X	X	3	1	1	1
38	Sodium chloride (hydrous solution)	$NaClÝH_2O$	1	1	1	1	1	1	1	1	3
39	Sodium hydroxide (hydrous solution)	$NaOHÝH_2O$	2 – 3	2 – 3	2	1 – 2	2	2 – 3	1	1	X
40	Sodium nitrate	$NaNO_3ÝH_2O$	2	1	1	1 – 2	1	1	1	1	X
41	Sodium sulphate (hydrous solution)	$Na_2SO_4Ý10H_2O$	2	1	1	1	1	1	1	1	X
42	Oxalic acid, hydrous solution	$C_2H_2O_4 + 2H_2O$	2	1 – 2	2 – 3	2	1 – 2	1 – 2	1	2	X
43	Oleic acid	$C_{12}H_{33}COOH$	1	1	2	3	1	1	1	1	3
44	1-Pentanol	$C_5H_{11}OH$	2 – 3	2	2	1	2	1	1	1	1
45	Perchlorothylene	C_2Cl_4	X	1 – 2	2 – 3	X	X	1	1	1	2
46	Crude petroleum		X	1 – 2	1	2	3	1	1	1	2 – 3
47	Phosphoric acid	H_3PO_4	2	X	3 – X	1	2	1	1	1 – 2	X
48	N-propyl alcohol	C_3H_8O	2 – 3	○	3	1	2	1	1	1	1
49	Propylene glycol-1.2	$C_3H_8O_2$	1 – 2	◇	2 – 3	1 – 2	1 – 2	1 – 2	1	1	1
50	Nitric acid 40%	HNO_3	2	X	X	2 – 3	2	1	1	1 – 2	X
51	Hydrochloric acid	HCl	1 – 2	X	2 – 3	1	1	1	1	3	X
52	Sulphuric acid 30%	H_2SO_4	1 – 2	X	2	X	1 – 2	1 – 2	1	X	X
53	Sulphurous acid	H_2SO_3	1	X	2 – 3	1	1	1	1	X	X
54	Carbon tetrachloride	CCl_4	X	1 – 2	3	X	X	2 – 3	1	1	2
55	Toluol	C_7H_8	X	1 – 2	X	2 – 3	X	1	1	1	1
56	Tributyl phosphate	$C_{12}H_{27}O_4P$	X	○	X	1	X	2 – 3	1	1	1
57	Trichloroethylene	C_2HCl_3	X	1 – 2	3	X	1	1	1	1	2 – 3
58	Trichlorofluormethane (chloroform)	CCl_3F	X	○	X	3	X	1	1	1	1
59	Drinking water	H_2O	(X) 1	1	1	1	(X) 1	1	1	1	2

Mistakes and omissions excepted, subject to change without notice.

Float switches

Schwimmerschalter
Interrupteurs à flotteur
Interruttori a galleggiante
Interruptores flotador



Enclosed float switches

Type 651 - 696



Product advantages

- splash-proof
- protected against coarse dirt
- simple assembly
- long electrical lifetime due to implementation of dry-reed contacts
- high operating safety due to ventilation duct between slide tube and float

Characteristics

- installation in the cover of the container (from the top) or bottom of the container (from the bottom) possible
- multiple level heights can be monitored with one float
- alternatively normally open/normally closed contact function or change-over contact

Contact function with rising level	**Order ID**						
	651.00 □ .50	**653.00 □ .50**	**656.00 □ .90**	**691.00 □ .90**	**693.00 □ .90**	**696.00 □ .90**	**696.00 □ .NPT**
Normally open contact	0 0 1	0 0 1	0 0 1	0 0 1	0 0 1	0 0 1	0 0 1
Normally closed contact	0 0 2	0 0 2	0 0 2	0 0 2	0 0 2	0 0 2	0 0 2
Change-over contact	0 0 3	0 0 3	0 0 3	0 0 3	0 0 3	0 0 3	0 0 3
Components	**Material**						
Slide tube	PVC	PVC	PVC	MS	MS	MS	MS
Float	PP	PP	PP	NBR	NBR	NBR	NBR
Screw connection	PVC	PVC	PVC	MS	MS	MS	MS
Plug acc. to DIN 43650	1m PVC cable	1m PVC cable	3-pole	1m PVC cable	1m PVC cable	3-pole	3-pole
Operational data of the standard model [1)]	**See reverse for figures**						
Working temperature Cont./temp. with PVC cable	55 °C / 60 °C	55 °C / 60 °C	55 °C / 60 °C	90 °C / 90 °C	90 °C / 90°C	90 °C / 90°C	90 °C / 90°C
Max. admis. working pres.	U n p r e s s u r i z e d						

[1)] **The data relate to the ambient temperature T = 20°C.**

Switching capacity

Normally open contact/
normally closed contact
230 V =/ ~
0.5 A 10 VA
Change-over contact
100 V =/ ~
0.25 A 3 VA

□

Switching points (number)

The specified dimensions are the standard dimensions, a different length as well as up to 4 switching points are possible.

Other designs upon request: In case of more than 2 switching points, different plugs are used.

Mistakes and omissions excepted, subject to change without notice.

Order Fax Enclosed float switches Type 651 - 696

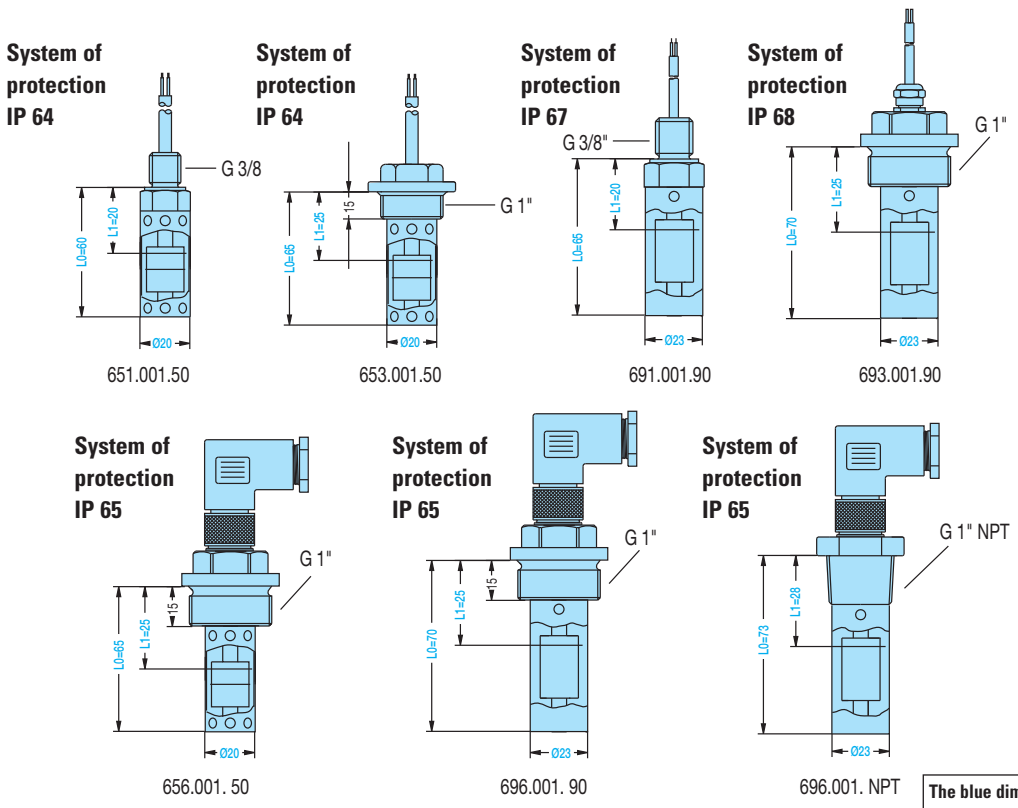

The blue dimensions are variable.
The specified dimensions are standard dimensions.

The switch can be designed for up to 4 levels. The minimum distances are type dependent and are specifically set by the manufacturer. The desired levels can be indicated in the following list.

Please copy the order form, complete the list below with the desired dimensions, and then use the copy as order form.

				Type number
Connecting head/flange				
Float				
Cable silicone/PVC			Length in metres:	
Working temperature			°C:	
Working pressure			bar:	
Switching capacity	V:	A:	VA:	
Medium				
Specific gravity			g/cm³:	
Order quantity			Units:	
Installation	from the top: ☐		from the bottom: ☐	

Date .....

L_0 = ... mm
L_1 = ... mm
L_2 = ... mm
L_3 = ... mm
L_4 = ... mm

Ordered by .....
Company .....
Street .....
City .....

Signature .....

Mistakes and omissions excepted, subject to change without notice.

Jacob elektronische Mess- und Regelgeräte GmbH, Düsseldorfer Straße 16, D-71332 Waiblingen Tel.: 07151/56806 60 Fax: 07151/56806 79

Float-switches

Type 320 - 390

Product advantages

- elevation adjustment possible
- simple assembly
- long electrical lifetime due to implementation of dry-reed contacts
- high operating safety due to ventilation duct between slide tube and float

Characteristics

- system of protection IP 64
- installation in the cover of the container (from the top) or bottom of the container (from the bottom) possible
- multiple level heights can be monitored with one float
- alternatively normally open/normally closed contact function or change-over contact

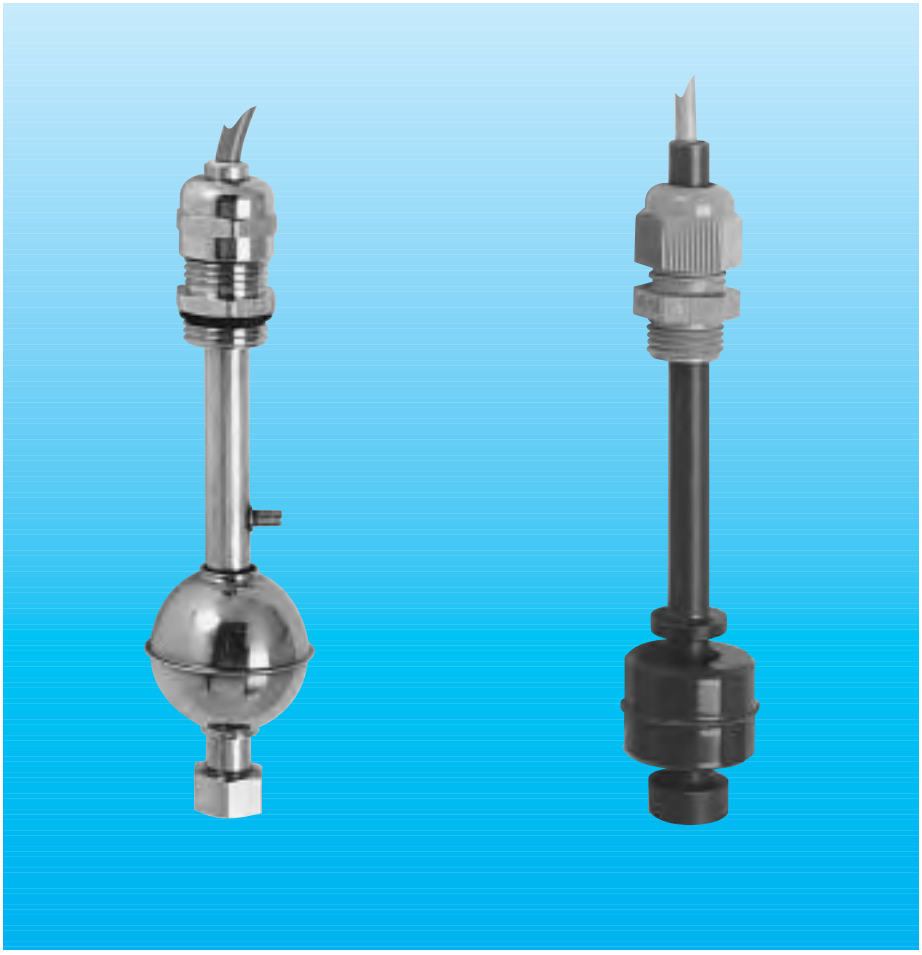

Contact function with rising level	Order ID						
	350.00 .04	320.00 .00	350.00 .00	360.00 .00	370.00 .90	380.00 .00	390.00 .00
Normally open contact	0 0 1	0 0 1	0 0 1	0 0 1	0 0 1	0 0 1	0 0 1
Normally closed contact	0 0 2	0 0 2	0 0 2	0 0 2	0 0 2	0 0 2	0 0 2
Change-over contact	0 0 3	0 0 3	0 0 3	0 0 3	0 0 3	0 0 3	0 0 3
Components	**Material**						
Slide tube	PVC	PA	PVC	VA	PP	PVDF	MS
Float	PP	PA	PVC	VA	PP	PVDF	VA
Screw connection	PVC	PA	PA	VA	PA	PA	MS
Operational data of the standard model [1]							
Working temperature Cont./temp. with PVC cable	55 °C / 60 °C	70 °C / 90 °C	55 °C / 60 °C	90 °C / 90 °C	90 °C / 90 °C	90 °C / 90 °C	90 °C / 90 °C
Working temperature Cont./temp. with silicone cable	55 °C / 60 °C	70 °C / 120 °C	55 °C / 60 °C	150 °C / 150 °C	110 °C / 110 °C	–	150 °C / 150 °C
Max. admis. working pres.	3 bar	3 bar	3 bar	3 bar	3 bar	3 bar	3 bar

[1] **The data relate to the ambient temperature T = 20°C.**

Switching capacity
Normally open contact/
230 V =/ ~
0.5 A 30 VA
Change-over cont./
normally closed cont.
100 V =/ ~
0.25 (0.5) A 3(20) VA
□

Switching points (number)
1 normally open contact / normally closed contact / change-over contact with standard length upon request: max. 4 normally open contacts / normally closed contacts or max. 3 change-over contacts

Switching behaviour
All functions are bistable.

Other designs upon request.

Mistakes and omissions excepted, subject to change without notice.

Order Fax

Float switches Type 320 - 390

Typ 350.001.04
Typ 350.002.04
Typ 350.003.04

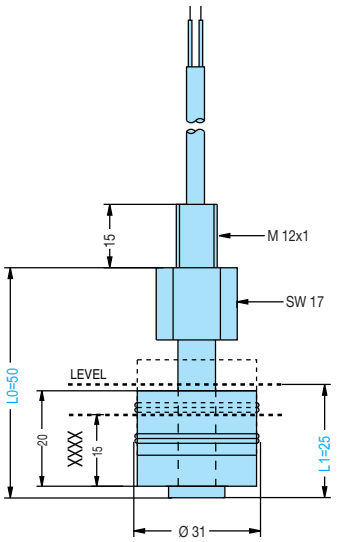

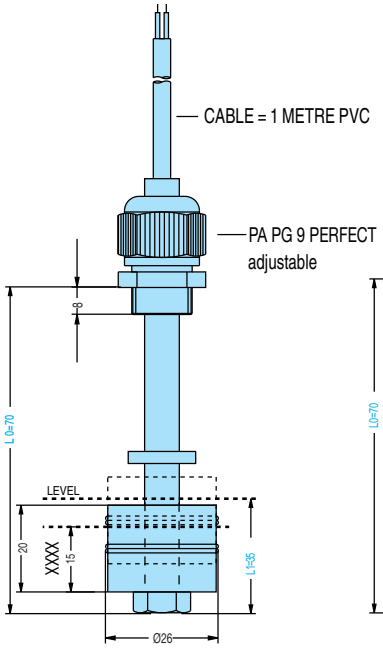

DESIGN PVC/PP/PA/PVDF
WTIH PVDF FLOAT Ø27

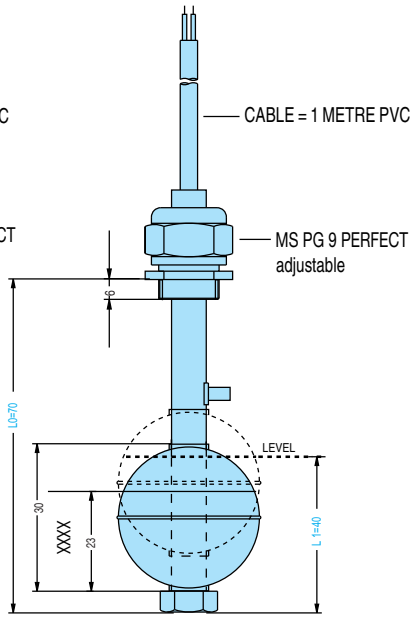

DESIGN
VA/MS

XXXX-depth of immersion
with density = 1

The blue dimensions are variable.
The specified dimensions are standard dimensions.

The switch can be designed for up to 4 levels. The minimum distances are type dependent and are specifically set by the manufacturer. The desired levels can be indicated in the following list.

Please copy the order form, complete the list below with the desired dimensions, and then use the copy as order form.

				Type number
Connecting head/flange				
Float				
Cable silicone/PVC			Length in metres:	
Working temperature			°C:	
Working pressure			bar:	
Switching capacity	V:	A:	VA:	
Medium				
Specific gravity			g/cm³:	
Order quantity			Units:	
Installation	from the top: ☐		from the bottom: ☐	

Date .....

L_0 = ... mm
L_1 = ... mm
L_2 = ... mm
L_3 = ... mm
L_4 = ... mm

Ordered by .....
Company .....
Street .....
City .....

Signature .....

Mistakes and omissions excepted, subject to change without notice.

Float switches

Type 321 - 391

Product advantages

- simple assembly
- long electrical lifetime due to implementation of dry-reed contacts
- high operating safety due to ventilation duct between slide tube and float

Characteristics

- system of protection IP 64
- installation in the cover of the container (from the top) or bottom of the container (from the bottom) possible
- multiple level heights can be monitored with one float
- alternatively normally open/normally closed contact function or change-over contact

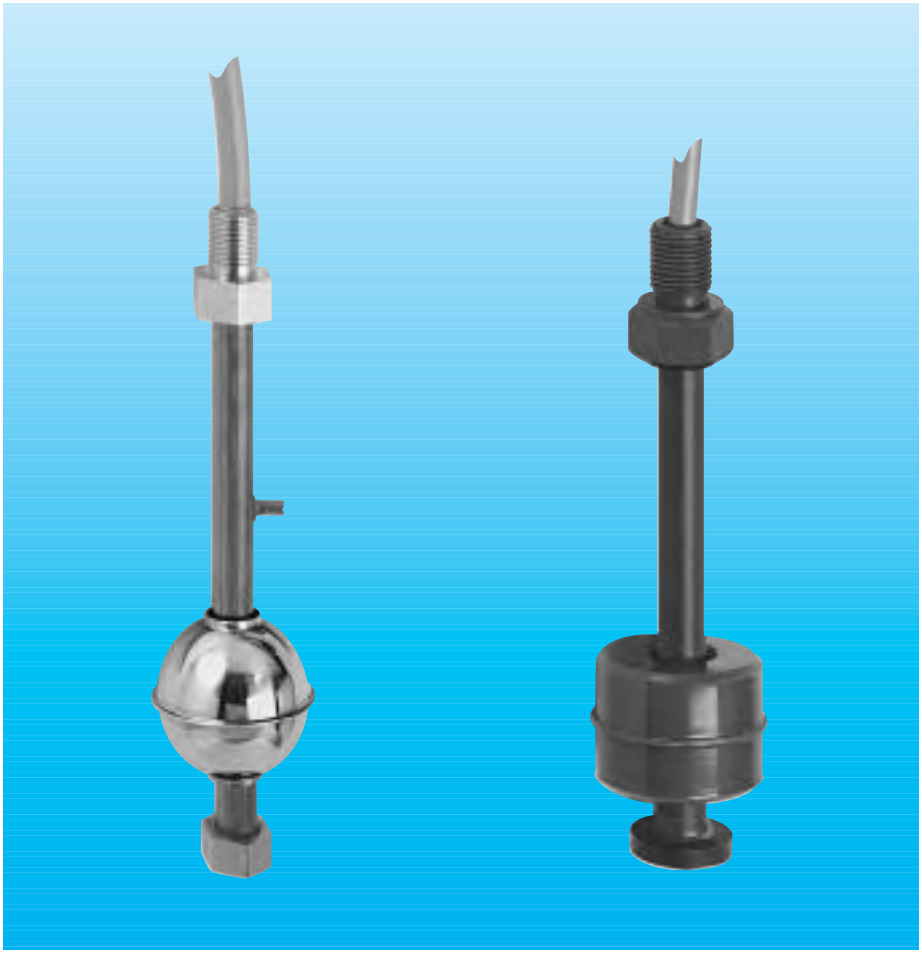

Contact function with rising level	Order ID 321.00 □ .00	351.00 □ .00	361.00 □ .00	371.00 □ .00	381.00 □ .00	391.00 □ .00
Normally open contact	0 0 1	0 0 1	0 0 1	0 0 1	0 0 1	0 0 1
Normally closed contact	0 0 2	0 0 2	0 0 2	0 0 2	0 0 2	0 0 2
Change-over contact	0 0 3	0 0 3	0 0 3	0 0 3	0 0 3	0 0 3
Components	**Material**					
Slide tube	PA	PVC	VA	PP	PVDF	MS
Float	PA	PVC	VA	PP	PVDF	VA
Screw connection	PA	PVC	VA	PP	PVDF	MS
Operational data of the standard model [1)]						
Working temperature Cont./temp. with PVC cable	70 °C / 90 °C	55 °C / 60 °C	90 °C / 90 °C	90 °C / 90 °C	90 °C / 90 °C	90 °C / 90 °C
Working temperature Cont./temp. with silicone cable	90 °C / 120 °C	55 °C / 60 °C	110 °C / 110 °C	110 °C / 110 °C	130 °C / 150 °C	150 °C / 150 °C
Max. admis. working pres.	3 bar	3 bar	15 bar	3 bar	3 bar	15 bar

[1)] **The data relate to the ambient temperature T = 20°C.**

Switching capacity
Normally open contact/
230 V =/ ~
0.5 A 30 VA
Change-over contact/
normally closed contact
100 V =/ ~
0.25 (0.5) A 3(20) VA

□

Switching points (number)
1 normally open contact / normally closed contact / change-over contact with standard length upon request: max. 4 normally open contacts / normally closed contacts or max. 3 change-over contacts

Switching behaviour
All functions are bistable.

Other designs upon request.

Mistakes and omissions excepted, subject to change without notice.

Order Fax

Float switches Type 321 - 391

The switch can be designed for up to 4 levels. The minimum distances are type dependent and are specifically set by the manufacturer. The desired levels can be indicated in the following list.

Please copy the order form, complete the list below with the desired dimensions, and then use the copy as order form.

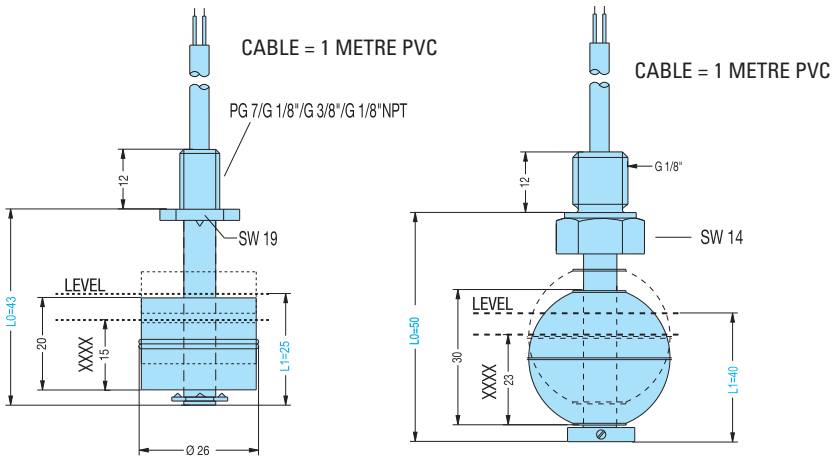

DESIGN
PVC/PP/PA/PVDF
WITH PVDF FLOAT Ø27

DESIGN
VA/MS

XXXX-depth of immersion
with density = 1

The blue dimensions are variable.
The specified dimensions are standard dimensions.

L_0 = ... mm

L_1 = ... mm

L_2 = ... mm

L_3 = ... mm

L_4 = ... mm

				Type number
Connecting head/flange				
Float				
Cable silicone/PVC			Length in metres:	
Working temperature			°C:	
Working pressure			bar:	
Switching capacity	V:	A:	VA:	
Medium				
Specific gravity			g/cm³:	
Order quantity			Units:	
Installation	from the top: ☐		from the bottom: ☐	

Date .....

Ordered by .....
Company .....
Street .....
City .....

Signature .....

Mistakes and omissions excepted, subject to change without notice.

Jacob elektronische Mess- und Regelgeräte GmbH, Düsseldorfer Straße 16, D-71332 Waiblingen Tel.: 07151/56806 60 Fax: 07151/56806 79

Float switches

Type 322 - 392

Product advantages

- inclination and clear opening adjustable
- simple assembly
- long electrical lifetime due to implementation of dry-reed contacts
- high operating safety due to ventilation duct between slide tube and float

Characteristics

- system of protection IP 64
- lateral installation, unpressurized also slide tube to the top possible
- multiple level heights can be monitored with one float
- alternatively normally open/normally closed contact function or change-over contact



Contact function with rising level	Order ID 322.00 □ .00	352.00 □ .00	362.00 □ .00	372.00 □ .00	—	392.00 □ .00
Normally open contact	0 0 1	0 0 1	0 0 1	0 0 1	—	0 0 1
Normally closed contact	0 0 2	0 0 2	0 0 2	0 0 2	—	0 0 2
Change-over contact	0 0 3	0 0 3	0 0 3	0 0 3	—	0 0 3
Components	**Material**					
Slide tube	PA	PVC	VA	PP	—	MS
Float	PA	PVC	VA	PP	—	VA
Screw connection	PA	PA	VA	PA	—	MS
Operational data of the standard model [1]						
Working temperature Cont./temp. with PVC cable	70 °C / 90 °C	55 °C / 60 °C	90 °C / 90 °C	90 °C / 90 °C	—	90 °C / 90 °C
Working temperature Cont./temp. with silicone cable	70 °C / 120 °C	55 °C / 60 °C	150 °C / 150 °C	110 °C / 110 °C	—	150 °C / 150 °C
Max. admis. working pres.	3 bar	3 bar	3 bar [2]	3 bar	—	3 bar [2]

[1] **The data relate to the ambient temperature T = 20°C.**

Switching capacity
Normally open contact/
230 V =/ ~
0.5 A 30 VA
Change-over contact/
normally closed contact
100 V =/ ~
0.25 (0.5) A 3(20) VA

Switching points (number)
1 normally open contact / normally closed contact / change-over contact with standard length upon request: max. 4 normally open contacts / normally closed contacts or max. 3 change-over contacts

Switching behaviour
All functions are bistable.

Other designs upon request.

[2] Higher pressures upon request

Mistakes and omissions excepted, subject to change without notice.

Order Fax

Float switches Type 322 - 392

The switch can be designed for up to 4 levels. The minimum distances are type dependent and are specifically set by the manufacturer. The desired levels can be indicated in the following list.

Please copy the order form, complete the list below with the desired dimensions, and then use the copy as order form.

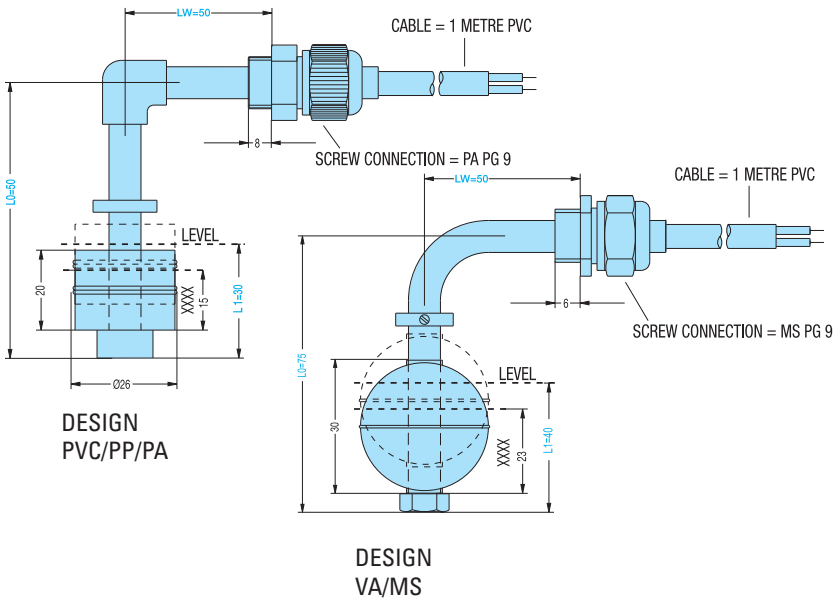

XXXX-depth of immersion with density = 1

The blue dimensions are variable.
The specified dimensions are standard dimensions.

LW = ... **mm**

L_0 = ... **mm**

L_1 = ... **mm**

L_2 = ... **mm**

L_3 = ... **mm**

L_4 = ... **mm**

			Type number
Connecting head/flange			
Float			
Cable silicone/PVC			Length in metres:
Working temperature			°C:
Working pressure			bar:
Switching capacity	V:	A:	VA:
Medium			
Specific gravity			g/cm^3:
Order quantity			Units:

Date .....

Ordered by .....
Company .....
Street .....
City .....

Signature .....

Mistakes and omissions excepted, subject to change without notice.

Jacob elektronische Mess- und Regelgeräte GmbH, Düsseldorfer Straße 16, D-71332 Waiblingen Tel.: 07151/56806 60 Fax: 07151/56806 79

Float switches

Type 323 - 393

Product advantages

- elevation adjustment possible
- simple assembly
- long electrical lifetime due to implementation of dry-reed contacts
- high operating safety due to ventilation duct between slide tube and float

Characteristics

- system of protection IP 64 (IP 68)
- installation in the cover of the container (from the top) or unpressurized in the bottom of the container (from the bottom) possible
- multiple level heights can be monitored with one float
- alternatively normally open/normally closed contact function or change-over contact

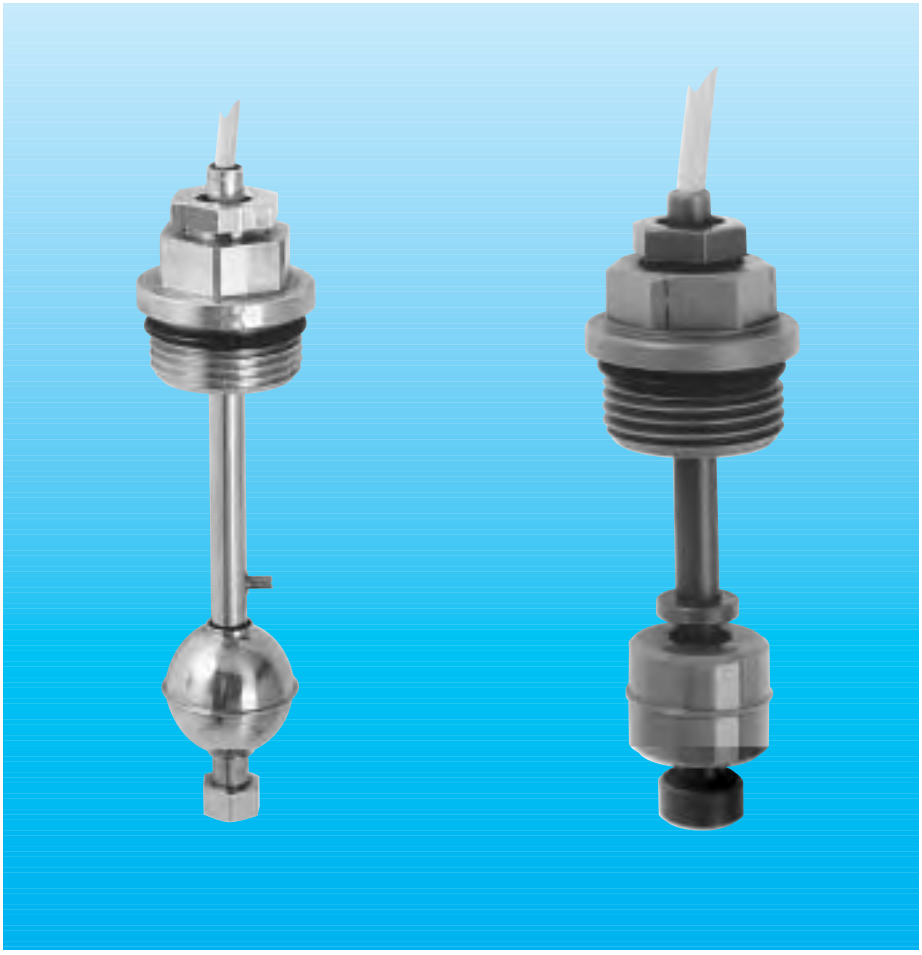

Contact function with rising level	Order ID 323.00 □ .00	353.00 □ .00	363.00 □ .00	373.00 □ .00	383.00 □ .00	393.00 □ .00
Normally open contact	0 0 1	0 0 1	0 0 1	0 0 1	0 0 1	0 0 1
Normally closed contact	0 0 2	0 0 2	0 0 2	0 0 2	0 0 2	0 0 2
Change-over contact	0 0 3	0 0 3	0 0 3	0 0 3	0 0 3	0 0 3
Components	**Material**					
Slide tube	PA	PVC	VA	PP	PVDF	MS
Float	PA	PVC	VA	PP	PVDF	VA
Screw connection	PA	PVC	VA	PP	PVDF	MS
Operational data of the standard model [1]						
Working temperature Cont./temp. with PVC cable	70 °C / 90 °C	55 °C / 60 °C	90 °C / 90 °C	90 °C / 90 °C	90 °C / 90 °C	90 °C / 90 °C
Working temperature Cont./temp. with silicone cable	70 °C / 120 °C	55 °C / 60 °C	150 °C / 150 °C	110 °C / 110 °C	110 °C / 110 °C	150 °C / 150 °C
Max. admis. working pres.	3 bar	3 bar	3 bar[2]	3 bar	3 bar	3 bar[2]

[1] **The data relate to the ambient temperature T = 20°C.**

Switching capacity
Normally open contact/
230 V =/ ~
0.5 A 30 VA
Change-over contact/
normally closed contact
100 V =/ ~
0.25 (0.5) A 3(20) VA
□

Switching points (number)
1 normally open contact / normally closed contact / change-over contact with standard length upon request: max. 4 normally open contacts / normally closed contacts or max. 3 change-over contacts

Switching behaviour
All functions are bistable.

Other designs upon request.

[2] Higher pressures upon request

Mistakes and omissions excepted, subject to change without notice.

Order Fax

Float switches Type 323 - 393

The switch can be designed for up to 4 levels. The minimum distances are type dependent and are specifically set by the manufacturer. The desired levels can be indicated in the following list.

Please copy the order form, complete the list below with the desired dimensions, and then use the copy as order form.

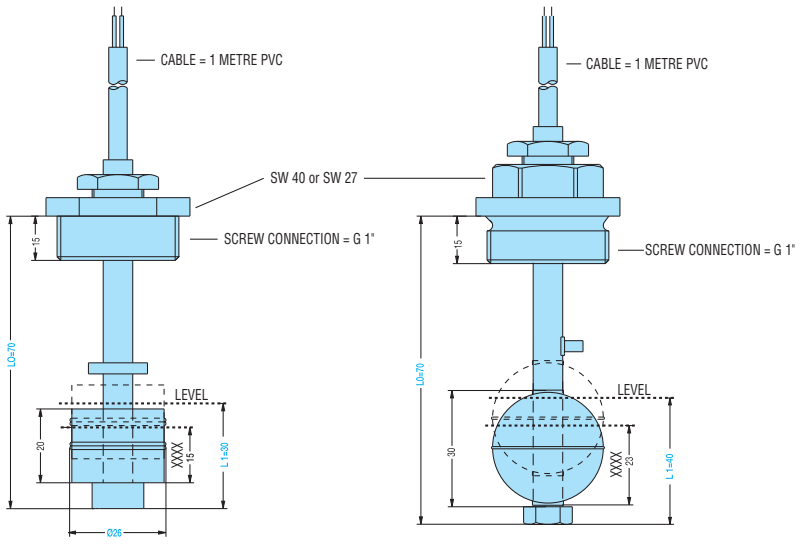

DESIGN
PVC/PP/PA/PVDF
WITH PVDF FLOAT Ø27

DESIGN
VA/MS

XXXX-depth of immersion
with density = 1

The blue dimensions are variable.
The specified dimensions are standard dimensions.

L_0 = ... mm

L_1 = ... mm

L_2 = ... mm

L_3 = ... mm

L_4 = ... mm

				Type number
Connecting head/flange				
Float				
Cable silicone/PVC			Length in metres:	
Working temperature			°C:	
Working pressure			bar:	
Switching capacity	V:	A:	VA:	
Medium				
Specific gravity			g/cm³:	
Order quantity			Units:	
Installation	from the top: ☐		from the bottom: ☐	

Date .....

Ordered by .....

Company .....

Street .....

City .....

Signature .....

Mistakes and omissions excepted, subject to change without notice.

Jacob elektronische Mess- und Regelgeräte GmbH, Düsseldorfer Straße 16, D-71332 Waiblingen Tel.: 07151/56806 0 Fax: 07151/56806 79

Float switches

Type 324 - 394

Product advantages

- elevation adjustment possible
- simple assembly
- long electrical lifetime due to implementation of dry-reed contacts
- high operating safety due to ventilation duct between slide tube and float

Characteristics

- system of protection IP 67
- installation in the cover of the container (from the top) or bottom of the container (from the bottom) possible
- multiple level heights can be monitored with one float
- alternatively normally open/normally closed contact function or change-over contact



Contact function with rising level	Order ID 324.00 □ .00	354.00 □ .00	364.00 □ .00	374.00 □ .00	384.00 □ .00	394.00 □ .00
Normally open contact	0 0 1	0 0 1	0 0 1	0 0 1	0 0 1	0 0 1
Normally closed contact	0 0 2	0 0 2	0 0 2	0 0 2	0 0 2	0 0 2
Change-over contact	0 0 3	0 0 3	0 0 3	0 0 3	0 0 3	0 0 3
Components	**Material**					
Slide tube	PA	PVC	VA	PP	PVDF	MS
Float	PA	PVC	VA	PP	PVDF	VA
Screw connection	PA	PVC	VA	PP	PVDF	MS
Connecting box	ABS 65x65x55	ABS 65x65x55	ALU 63x57x37	ABS 65x65x55	ABS 65x65x55	ALU 63x57x37
Operational data of the standard model [1]						
Working temperature Cont./temp. with PVC cable	70 °C / 90 °C	55 °C / 60 °C	90 °C / 90 °C	90 °C / 90 °C	90 °C / 90 °C	90 °C / 90 °C
Working temperature Cont./temp. with silicone cable	70 °C / 120 °C	—	150 °C / 150 °C	110 °C / 110 °C	90 °C / 140 °C	150 °C / 150 °C
Max. admis. working pres.	3 bar	3 bar	3 bar[2]	3 bar	3 bar	3 bar[2]

[1] **The data relate to the ambient temperature T = 20°C.**

Switching capacity Normally open contact/ 230 V =/ ~ 0.5 A 30 VA Change-over contact/ normally closed contact 100 V =/ ~ 0.25 (0.5) A 3(20) VA

□

Switching points (number) 1 normally open contact / normally closed contact / change-over contact with standard length upon request: max. 4 normally open contacts / normally closed contacts or max. 3 change-over contacts

Switching behaviour All functions are bistable.

Other designs upon request.

[2] Higher pressures upon request

Mistakes and omissions excepted, subject to change without notice.

Order Fax

Float switches Type 324 - 394

The switch can be designed for up to 4 levels. The minimum distances are type dependent and are specifically set by the manufacturer. The desired levels can be indicated in the following list.

Please copy the order form, complete the list below with the desired dimensions, and then use the copy as order form.

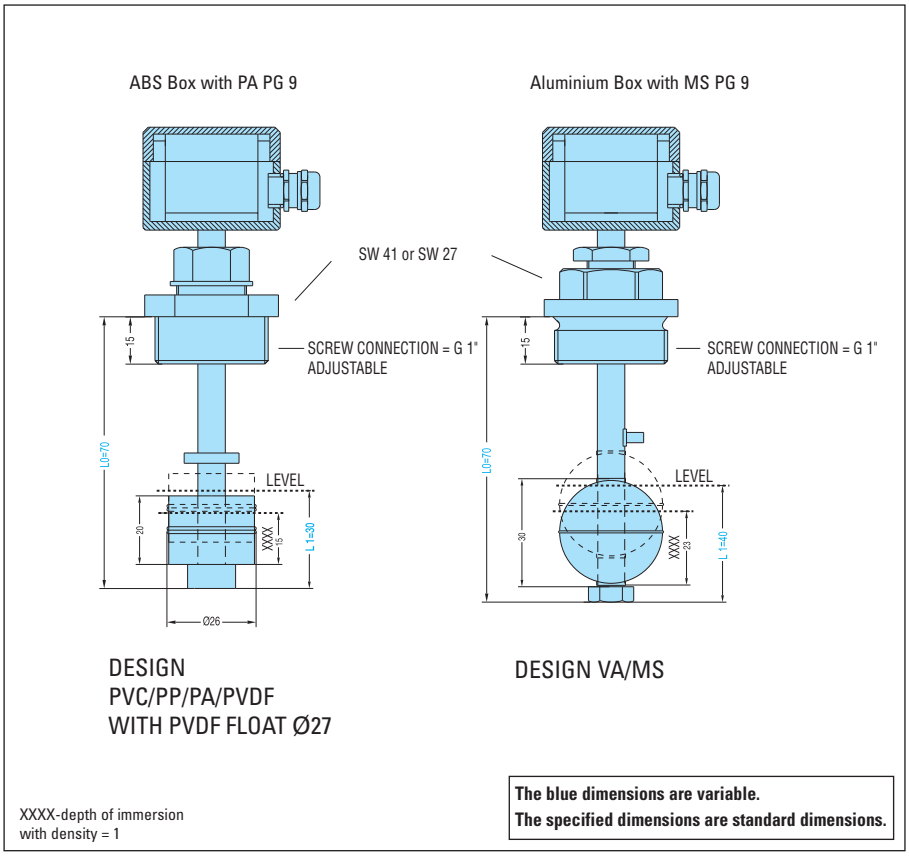

L_0 = ... mm

L_1 = ... mm

L_2 = ... mm

L_3 = ... mm

L_4 = ... mm

	Type number
Connecting head/flange	
Float	
Cable silicone/PVC	Length in metres:
Working temperature	°C:
Working pressure	bar:
Switching capacity	V: A: VA:
Medium	
Specific gravity	g/cm³:
Order quantity	Units:
Installation	from the top: ☐ from the bottom: ☐

Date .....

Ordered by .....

Company .....

Street .....

City .....

Signature .....

Mistakes and omissions excepted, subject to change without notice.

Float switches

Type 325 - 395

Product advantages

- inclination and clear opening adjustable
- simple assembly
- long electrical lifetime due to implementation of dry-reed contacts
- high operating safety due to ventilation duct between slide tube and float

Characteristics

- system of protection IP 67
- lateral installation, unpressurized also slide tube to the top possible
- multiple level heights can be monitored with one float
- alternatively normally open/normally closed contact function or change-over contact



Contact function with rising level	Order ID 325.00 □ .00	355.00 □ .00	365.00 □ .00	375.00 □ .00	—	395.00 □ .00
Normally open contact	0 0 1	0 0 1	0 0 1	0 0 1	—	0 0 1
Normally closed contact	0 0 2	0 0 2	0 0 2	0 0 2	—	0 0 2
Change-over contact	0 0 3	0 0 3	0 0 3	0 0 3	—	0 0 3
Components	**Material**					
Slide tube	PA	PVC	VA	PP	—	MS
Float	PA	PVC	VA	PP	—	VA
Screw connection	PA	PVC	VA	PP	—	MS
Connecting box	ABS 65x65x55	ABS 65x65x55	ALU 63x57x37	ABS 65x65x55	—	ALU 63x57x37
Operational data of the standard model [1]						
Working temperature Cont./temp. with PVC cable	70 °C / 90 °C	55 °C / 60 °C	90 °C / 90 °C	90 °C / 90 °C	—	90 °C / 90 °C
Working temperature Cont./temp. with silicone cable	70 °C / 120 °C	—	150 °C / 150 °C	110 °C / 110 °C	—	150 °C / 150 °C
Max. admis. working pres.	3 bar	3 bar	3 bar[2]	3 bar	—	3 bar[2]

[1] **The data relate to the ambient temperature T = 20°C.**

Switching capacity Normally open contact/ 230 V =/ ~ 0.5 A 30 VA Change-over contact/ normally closed contact 100 V =/ ~ 0.25 (0.5) A 3(20) VA

□

Switching points (number) 1 normally open contact / normally closed contact / change-over contact with standard length upon request: max. 4 normally open contacts / normally closed contacts or max. 3 change-over contacts

Switching behaviour All functions are bistable.

Other designs upon request.

[2] Higher pressures upon request

Mistakes and omissions excepted, subject to change without notice.

Order Fax

Float switches Type 325 - 395

The switch can be designed for up to 4 levels. The minimum distances are type dependent and are specifically set by the manufacturer. The desired levels can be indicated in the following list.

Please copy the order form, complete the list below with the desired dimensions, and then use the copy as order form.

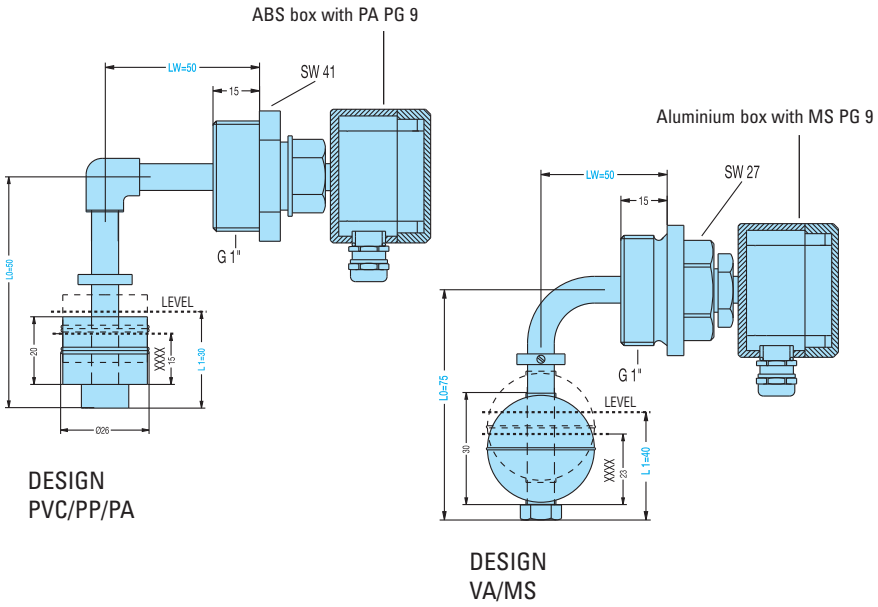

XXXX-depth of immersion with density = 1

The blue dimensions are variable.
The specified dimensions are standard dimensions.

LW = ... **mm**

L_0 = ... **mm**

L_1 = ... **mm**

L_2 = ... **mm**

L_3 = ... **mm**

L_4 = ... **mm**

	Type number
Connecting head/flange	
Float	
Cable silicone/PVC	Length in metres:
Working temperature	°C:
Working pressure	bar:
Switching capacity V: A:	VA:
Medium	
Specific gravity	g/cm³:
Order quantity	Units:

Date .....

Ordered by .....

Company .....

Street .....

City .....

Signature .....

Mistakes and omissions excepted, subject to change without notice.

Jacob elektronische Mess- und Regelgeräte GmbH, Düsseldorfer Straße 16, D-71332 Waiblingen Tel.: 07151/568060 Fax: 07151/568079

Float switches

Type 326 - 396

Product advantages

- simple assembly
- easy service
- extremely robust
- long electrical lifetime due to implementation of dry-reed contacts
- high operating safety due to ventilation duct between slide tube and float

Characteristics

- system of protection IP 65
- installation in the cover of the container (from the top) or bottom of the container (from the bottom) possible
- multiple level heights can be monitored with one float
- alternatively normally open/normally closed contact function or change-over contact



Contact function with rising level	Order ID 326.00 □ .00	356.00 □ .00	366.00 □ .00	376.00 □ .00	386.00 □ .00	396.00 □ .00
Normally open contact	0 0 1	0 0 1	0 0 1	0 0 1	0 0 1	0 0 1
Normally closed contact	0 0 2	0 0 2	0 0 2	0 0 2	0 0 2	0 0 2
Change-over contact	0 0 3	0 0 3	0 0 3	0 0 3	0 0 3	0 0 3
Components	**Material**					
Slide tube	PA	PVC	VA	PP	PVDF	MS
Float	PA	PVC	VA	PP	PVDF	VA
Screw connection	PA	PVC	VA	PP	PVDF	MS
Plug acc. to DIN 43650	2/3-pole	2/3-pole	2/3-pole+PE	2/3-pole	2/3-pole	2/3-pole+PE
Operational data of the standard model [1]						
Working temperature Cont./temp. with PVC cable	70 °C / 90 °C	55 °C / 60 °C	90 °C / 90 °C	90 °C / 90 °C	—	90 °C / 90 °C
Working temperature Cont./temp. with silicone cable	90 °C / 110 °C	—	110 °C / 110 °C	110 °C / 110 °C	—	110 °C / 110 °C
Max. admis. working pres.	3 bar	3 bar	15 bar	3 bar	—	15 bar

[1] **The data relate to the ambient temperature T = 20°C.**

Switching capacity
Normally open contact/
230 V =/ ~
0.5 A 30 VA
Change-over contact/
normally closed contact
100 V =/ ~
0.25 (0.5) A 3(20) VA

Switching points (number)
1 normally open contact / normally closed contact / change-over contact with standard length upon request: max. 4 normally open contacts / normally closed contacts or max. 2 change-over contacts

Switching behaviour All functions are bistable.

In case of more than 2 switching points, different plugs are used.

Other designs upon request.

Mistakes and omissions excepted, subject to change without notice.

Order Fax

Float switches Type 326 - 396

The switch can be designed for up to 4 levels. The minimum distances are type dependent and are specifically set by the manufacturer. The desired levels can be indicated in the following list.

Please copy the order form, complete the list below with the desired dimensions, and then use the copy as order form.

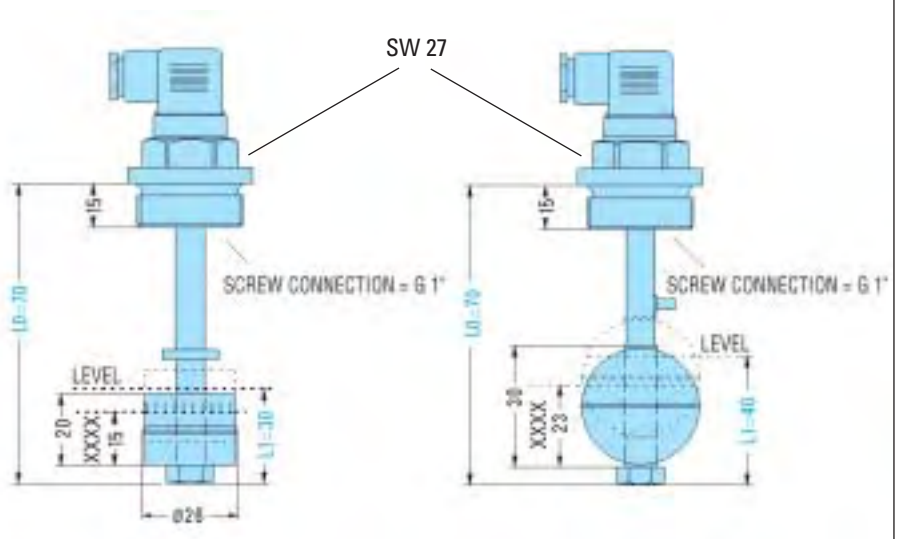

DESIGN
PVC/PP/PA/PVDF

WITH PVDF FLOAT Ø27

DESIGN
VA/MS

XXXX-depth of immersion
with density = 1

The blue dimensions are variable.
The specified dimensions are standard dimensions.

L_0 = ... mm
L_1 = ... mm
L_2 = ... mm
L_3 = ... mm
L_4 = ... mm

				Type number
Connecting head/flange				
Float				
Cable silicone/PVC			Length in metres:	
Working temperature			°C:	
Working pressure			bar:	
Switching capacity	V:	A:	VA:	
Medium				
Specific gravity			g/cm³:	
Order quantity			Units:	
Installation	from the top: ☐		from the bottom: ☐	

Date .....

Ordered by .....
Company .....
Street .....
City .....

Signature .....

Mistakes and omissions excepted, subject to change without notice.

Jacob elektronische Mess- und Regelgeräte GmbH, Düsseldorfer Straße 16, D-71332 Waiblingen Tel.: 07151/56806 60 Fax: 07151/56806 79

Float switches

Type 327 - 397

Product advantages

- simple assembly
- easy service
- long electrical lifetime due to implementation of dry-reed contacts
- high operating safety due to ventilation duct between slide tube and float

Characteristics

- system of protection IP 65
- installation in the cover of the container (from the top) or bottom of the container (from the bottom) possible
- multiple level heights can be monitored with one float
- alternatively normally open/normally closed contact function or change-over contact

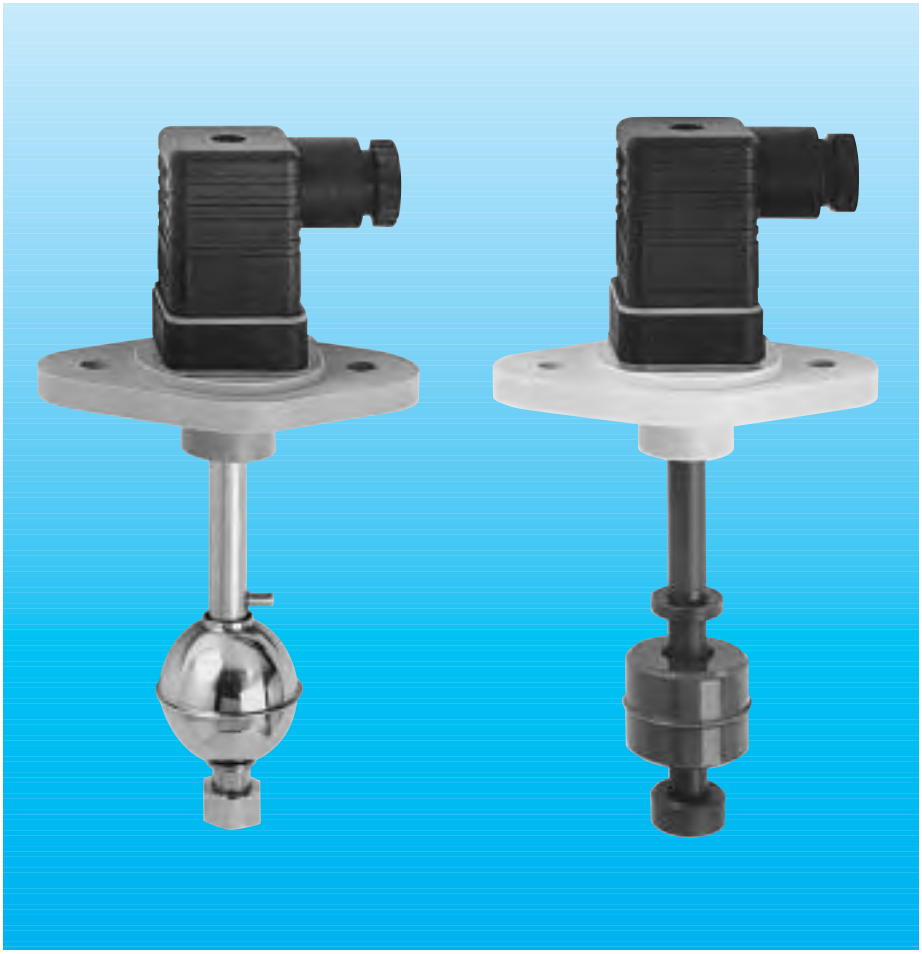

Contact function with rising level	Order ID 327.00 □ .00	357.00 □ .00	367.00 □ .00	377.00 □ .00	387.00 □ .00	397.00 □ .00
Normally open contact	0 0 1	0 0 1	0 0 1	0 0 1	0 0 1	0 0 1
Normally closed contact	0 0 2	0 0 2	0 0 2	0 0 2	0 0 2	0 0 2
Change-over contact	0 0 3	0 0 3	0 0 3	0 0 3	0 0 3	0 0 3
Components	**Material**					
Slide tube	PA	PVC	VA	PP	PVDF	MS
Float	PA	PVC	VA	PP	PVDF	VA
Oval flange	PP	PP	PP	PP	PP	PP
Plug acc. to DIN 43650	2/3-pole	2/3-pole	2/3-pole+PE	2/3-pole	2/3-pole	2/3-pole+PE
Operational data of the standard model [1]						
Working temperature Cont./temp. with PVC cable	70 °C / 90 °C	55 °C / 60 °C	90 °C / 90 °C	90 °C / 90 °C	—	90 °C / 90 °C
Working temperature Cont./temp. with silicone cable	90 °C / 110 °C	—	110 °C / 110 °C	110 °C / 110 °C	—	110 °C / 110 °C
Max. admis. working pres.	3 bar	3 bar	5 bar	3 bar	—	5 bar

[1] **The data relate to the ambient temperature T = 20°C.**

Switching capacity
Normally open contact/
230 V =/ ~
0.5 A 30 VA
Change-over contact/
normally closed contact
100 V =/ ~
0.25 (0.5) A 3(20) VA

□

Switching points (number)
1 normally open contact / normally closed contact / change-over contact with standard length upon request: max. 3 normally open contacts / normally closed contacts or max. 2 change-over contacts

Switching behaviour All functions are bistable.

In case of more than 2 switching points, different plugs are used.

Other designs upon request.

Mistakes and omissions excepted, subject to change without notice.

Order Fax

Float switches Type 327 - 397

The switch can be designed for up to 4 levels. The minimum distances are type dependent and are specifically set by the manufacturer. The desired levels can be indicated in the following list.

Please copy the order form, complete the list below with the desired dimensions, and then use the copy as order form.

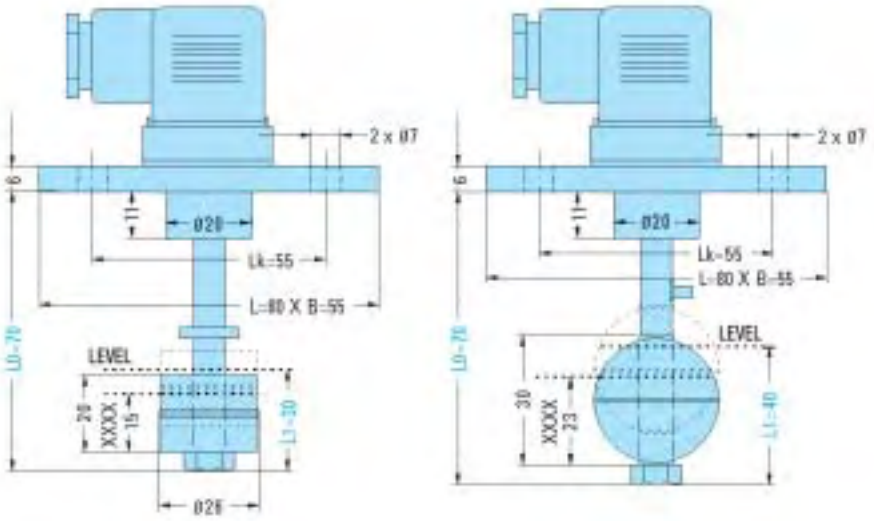

DESIGN
PVC/PP/PA/PVDF

WITH PVDF FLOAT Ø27

DESIGN
VA/MS

XXXX-depth of immersion
with density = 1

The blue dimensions are variable.
The specified dimensions are standard dimensions.

L_0 = ... mm
L_1 = ... mm
L_2 = ... mm
L_3 = ... mm
L_4 = ... mm

				Type number
Connecting head/flange				
Float				
Cable silicone/PVC			Length in metres:	
Working temperature			°C:	
Working pressure			bar:	
Switching capacity	V:	A:	VA:	
Medium				
Specific gravity			g/cm³:	
Order quantity			Units:	
Installation	from the top: ☐		from the bottom: ☐	

Date .....

Ordered by .....
Company .....
Street .....
City .....

Signature .....

Mistakes and omissions excepted, subject to change without notice.

Float switches

Type 328 - 398

Product advantages

- simple assembly
- easy service
- extremely robust
- long electrical lifetime due to implementation of dry-reed contacts
- high operating safety due to ventilation duct between slide tube and float

Characteristics

- system of protection IP 65
- installation in the cover of the container (from the top) or bottom of the container (from the bottom) possible
- multiple level heights can be monitored with one float
- alternatively normally open/normally closed contact function or change-over contact

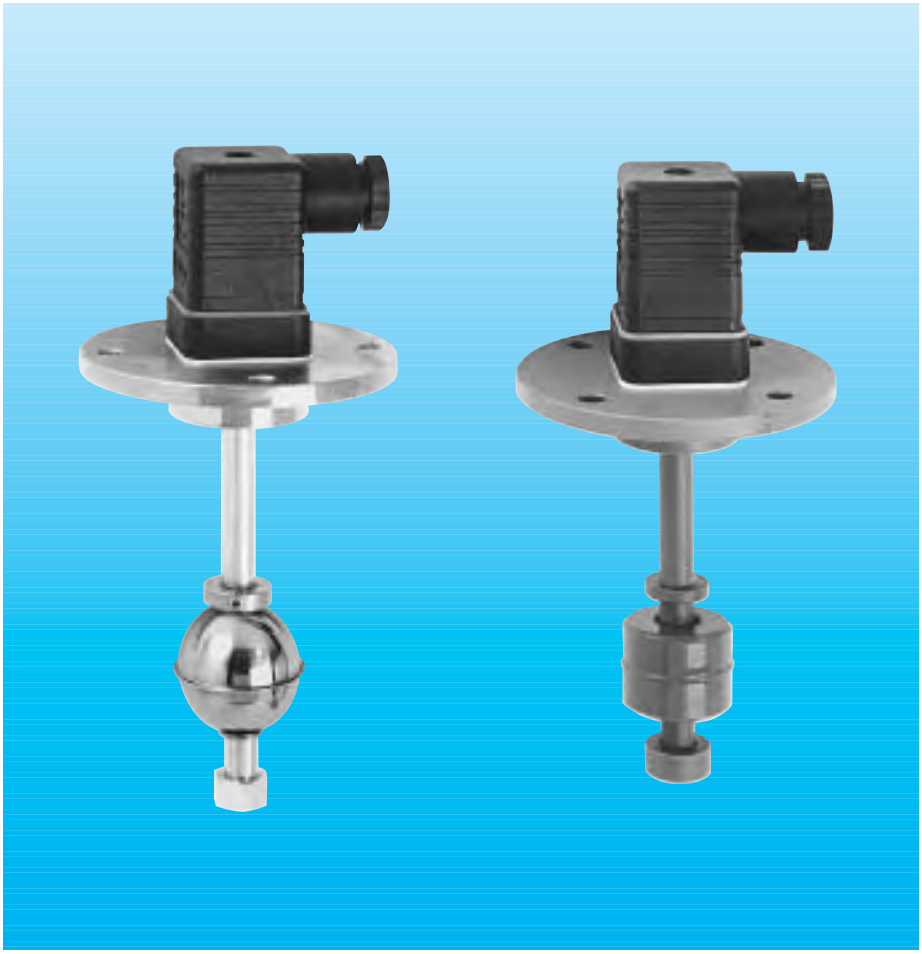

Contact function with rising level	Order ID 328.00 □ .00	358.00 □ .00	368.00 □ .00	378.00 □ .00	388.00 □ .00	398.00 □ .00
Normally open contact	0 0 1	0 0 1	0 0 1	0 0 1	0 0 1	0 0 1
Normally closed contact	0 0 2	0 0 2	0 0 2	0 0 2	0 0 2	0 0 2
Change-over contact	0 0 3	0 0 3	0 0 3	0 0 3	0 0 3	0 0 3
Components	**Material**					
Slide tube	PA	PVC	VA	PP	PVDF	MS
Float	PA	PVC	VA	PP	PVDF	VA
Flange	PA	PVC	VA	PP	PVDF	MS
Plug acc. to DIN 43650	3-pole	3-pole	3-pole + PE	3-pole	3-pole	3-pole + PE
Plug acc. to DIN 43050	6-pole	6-pole	6-pole without PE	6-pole	6-pole	6-pole without PE
Operational data of the standard model [1)]						
Working temp. Cont./temp.	70 °C / 90 °C	55 °C / 60 °C	90 °C / 90 °C	90 °C / 90 °C	—	90 °C / 90 °C
Possible w. temp. (u. request)	70 °C / 110 °C	—	110 °C / 110 °C	110 °C / 110 °C	—	110 °C / 110 °C
Max. admis. working pres.	3 bar	3 bar	15 bar	3 bar	3 bar	15 bar

[1)] **The data relate to the ambient temperature T = 20°C.**

Switching capacity
Normally open contact/
230 V =/ ~
0.5 A 30 VA
Change-over contact/
normally closed contact
100 V =/ ~
0.25 (0.5) A 3(20) VA

□

Switching points (number)
1 normally open contact / normally closed contact / change-over contact with standard length upon request: max. 4 normally open contacts / normally closed contacts or max. 2 change-over contacts

Switching behaviour
All functions are bistable.

In case of more than 2 switching points, different plugs are used.

Other designs upon request.

Mistakes and omissions excepted, subject to change without notice.

Order Fax

Float switches Type 328 - 398

Standard flanges with plug

Ø 74 LK = 60

Standard floats

VA = ball Ø 30
PVC/PA/PP = cylinder Ø 25X20
PVDF = cylinder Ø 27 h=30

Other flanges

with connecting box
made of ALU or ABS
Only upon request !!

Flanges acc. to DIN 2527

DN 50 PN 16/25	VA 1.4571 / St 37
DN 65 PN 16/25	VA 1.4571 / St 37
DN 80 PN 16/25	VA 1.4571 / St 37
DN 100 PN 16/25	VA 1.4571 / St 37
DN 125 PN 16/25	VA 1.4571 / St 37
DN 150 PN 16/25	VA 1.4571 / St 37

We also manufacture plastic flanges according to your wishes

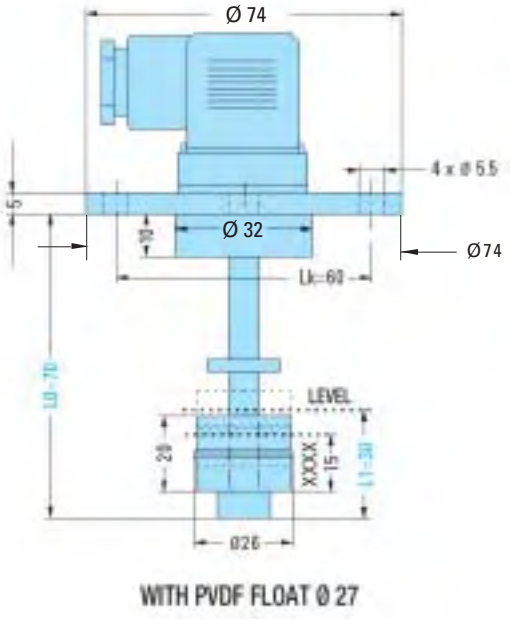

XXXX-depth of immersion
with density = 1

The blue dimensions are variable.
The specified dimensions are standard dimensions.

The switch can be designed for up to levels. The minimum distances are type dependent and are specifically set by the manufacturer. The desired levels can be indicated in the following list.

Please copy the order form, complete the list below with the desired dimensions, and then use the copy as order form.

	Type number
Connecting head/flange	
Float	
Cable silicone/PVC	Length in metres:
Working temperature	°C:
Working pressure	bar:
Switching capacity	V: A: VA:
Medium	
Specific gravity	g/cm³:
Order quantity	Units:
Installation	from the top: ☐ from the bottom: ☐

Date .....

Ordered by .....
Company .....
Street .....
City .....

Signature .....

L_0 = ... mm
L_1 = ... mm
L_2 = ... mm
L_3 = ... mm
L_4 = ... mm

Mistakes and omissions excepted, subject to change without notice.

Float switches

Type 230 - 290

Product advantages

- elevation adjustment possible
- simple assembly
- long electrical lifetime due to implementation of dry-reed contacts
- high operating safety due to ventilation duct between slide tube and float

Characteristics

- system of protection IP 64
- installation in the cover of the container (from the top) or bottom of the container (from the bottom) possible
- multiple level heights can be monitored with one float
- alternatively normally open/normally closed contact function or change-over contact



Contact function with rising level	Order ID 230.00 □ .00	240.00 □ .00	250.00 □ .00	260.00 □ .00	270.00 □ .00	280.00 □ .00	290.00 □ .00
Normally open contact	0 0 1	0 0 1	0 0 1	0 0 1	0 0 1	0 0 1	0 0 1
Normally closed contact	0 0 2	0 0 2	0 0 2	0 0 2	0 0 2	0 0 2	0 0 2
Change-over contact	0 0 3	0 0 3	0 0 3	0 0 3	0 0 3	0 0 3	0 0 3
Components	Only upon request			**Material**		Only upon reques	
Slide tube	PTFE	PVCHT	PVC	VA	PP	PVDF	MS
Float	PTFE[3]	PVCHT	PVC	VA	PP	PVDF	VA
Screw connection	PP	PP	MS	VA	PP	PP	MS
Operational data of the standard model [1]							
Working temperature Cont./temp. with PVC cable	—	80 °C / 90 °C	55 °C / 60 °C	90 °C / 90 °C	90 °C / 90 °C	—	90 °C / 90 °C
Working temperature Cont./temp. with silicone cable	—	80 °C / 90 °C	55 °C / 60 °C	150 °C / 150 °C	80 °C / 110 °C	—	150 °C / 150 °C
Max. admis. working pres.	—	3 bar	3 bar	3 bar	3 bar	—	3 bar

[1] **The data relate to the ambient temperature T = 20°C.**

Switching capacity Normally open contact/ normally closed contact/ change-over contact
230 V =/ ~
1.0 A 60 VA
Higher switching capacity upon request

Switching points (number) 1 normally open contact / normally closed contact / change-over contact with standard length upon request: max. 4 normally open contacts / normally closed contacts or max. 3 change-over contacts

Switching behaviour All functions are bistable.

Other designs upon request.

[3] PTFE float ø 55 x 75

Mistakes and omissions excepted, subject to change without notice.

Order Fax

Float switches Type 230 - 290

The switch can be designed for up to 4 levels. The minimum distances are type dependent and are specifically set by the manufacturer. The desired levels can be indicated in the following list.

Please copy the order form, complete the list below with the desired dimensions, and then use the copy as order form.

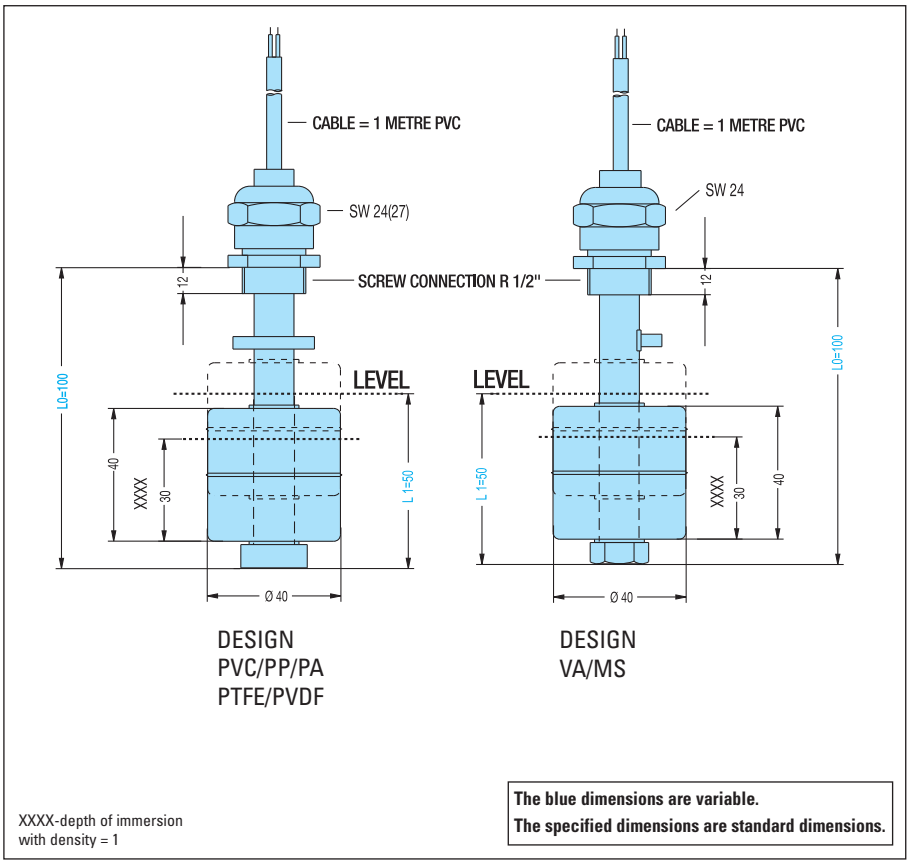

L_0 = ... mm

L_1 = ... mm

L_2 = ... mm

L_3 = ... mm

L_4 = ... mm

				Type number
Connecting head/flange				
Float				
Cable silicone/PVC			Length in metres:	
Working temperature			°C:	
Working pressure			bar:	
Switching capacity	V:	A:	VA:	
Medium				
Specific gravity			g/cm³:	
Order quantity			Units:	
Installation	from the top: ☐		from the bottom: ☐	

Date .....

Ordered by .....

Company .....

Street .....

City .....

Signature .....

Mistakes and omissions excepted, subject to change without notice.

Float switches

Type 231 - 291

Product advantages

- simple assembly
- long electrical lifetime due to implementation of dry-reed contacts
- high operating safety due to ventilation duct between slide tube and float

Characteristics

- system of protection IP 67 (IP 68)
- installation in the cover of the container (from the top) or bottom of the container (from the bottom) possible
- multiple level heights can be monitored with one float
- alternatively normally open/normally closed contact function or change-over contact

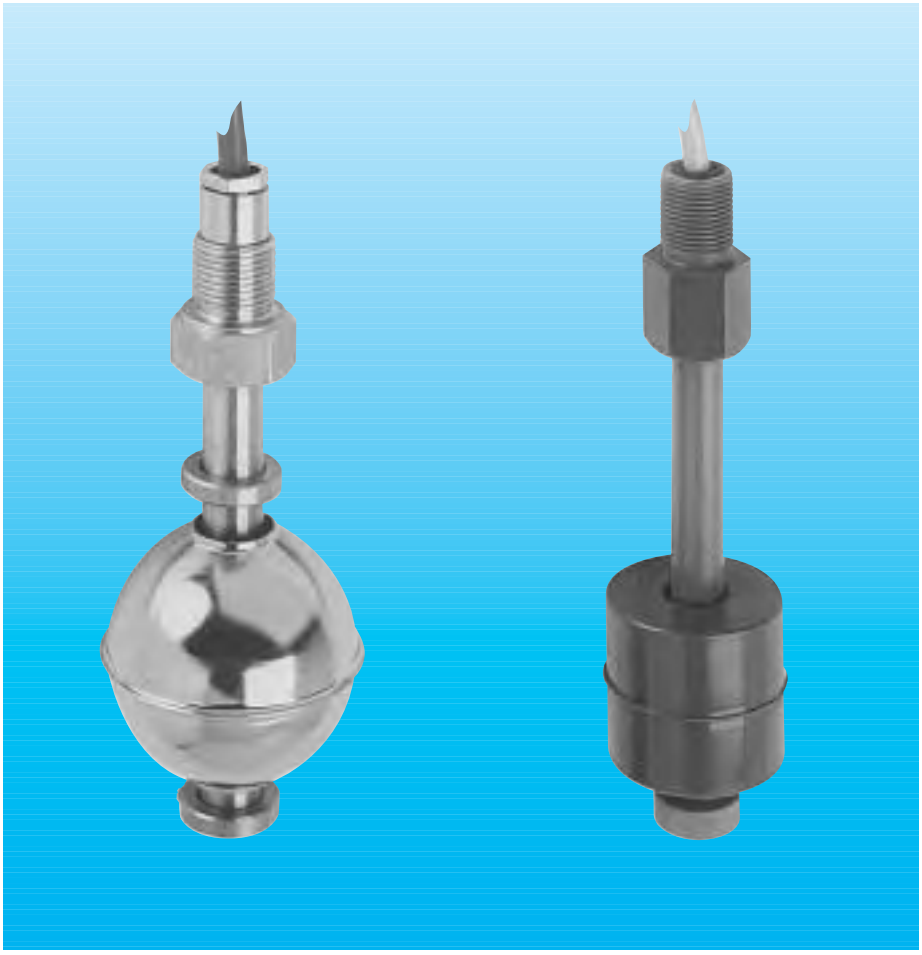

Contact function with rising level	**Order ID** 231.00 □ .00	241.00 □ .00	251.00 □ .00	261.00 □ .00	271.00 □ .00	281.00 □ .00	291.00 □ .00
Normally open contact	0 0 1	0 0 1	0 0 1	0 0 1	0 0 1	0 0 1	0 0 1
Normally closed contact	0 0 2	0 0 2	0 0 2	0 0 2	0 0 2	0 0 2	0 0 2
Change-over contact	0 0 3	0 0 3	0 0 3	0 0 3	0 0 3	0 0 3	0 0 3
Components	Only upon request			**Material**		Only upon request	
Slide tube	PTFE	PVCHT	PVC	VA	PP	PVDF	MS
Float	PTFE[3)]	PVCHT	PVC	VA	PP	PVDF	VA
Screw connection	PTFE	PP	PVC	VA	PP	PVDF	MS
Operational data of the standard model [1)]							
Working temperature Cont./temp. with PVC cable	—	80 °C / 90 °C	55 °C / 60 °C	90 °C / 90 °C	90 °C / 90 °C	—	90 °C / 90 °C
Working temperature Cont./temp. with silicone cable	—	80 °C / 90 °C	55 °C / 60 °C	150 °C / 150 °C	110 °C / 110 °C	—	150 °C / 150 °C
Max. admis. working pres.	—	3 bar	3 bar	20 bar	3 bar	—	20 bar

[1)] **The data relate to the ambient temperature T = 20°C.**

Switching capacity Normally open contact/ normally closed contact/ change-over contact
230 V =/ ~
1.0 A 60 VA
Higher switching capacity upon request

Switching points (number) 1 normally open contact / normally closed contact / change-over contact with standard length upon request: max. 4 normally open contacts / normally closed contacts or max. 3 change-over contacts

Switching behaviour All functions are bistable.

Other designs upon request.

[3)] PTFE float ø 55 x 75

Mistakes and omissions excepted, subject to change without notice.

Order Fax

Float switches Type 231 - 291

The switch can be designed for up to 4 levels. The minimum distances are type dependent and are specifically set by the manufacturer. The desired levels can be indicated in the following list.

Please copy the order form, complete the list below with the desired dimensions, and then use the copy as order form.

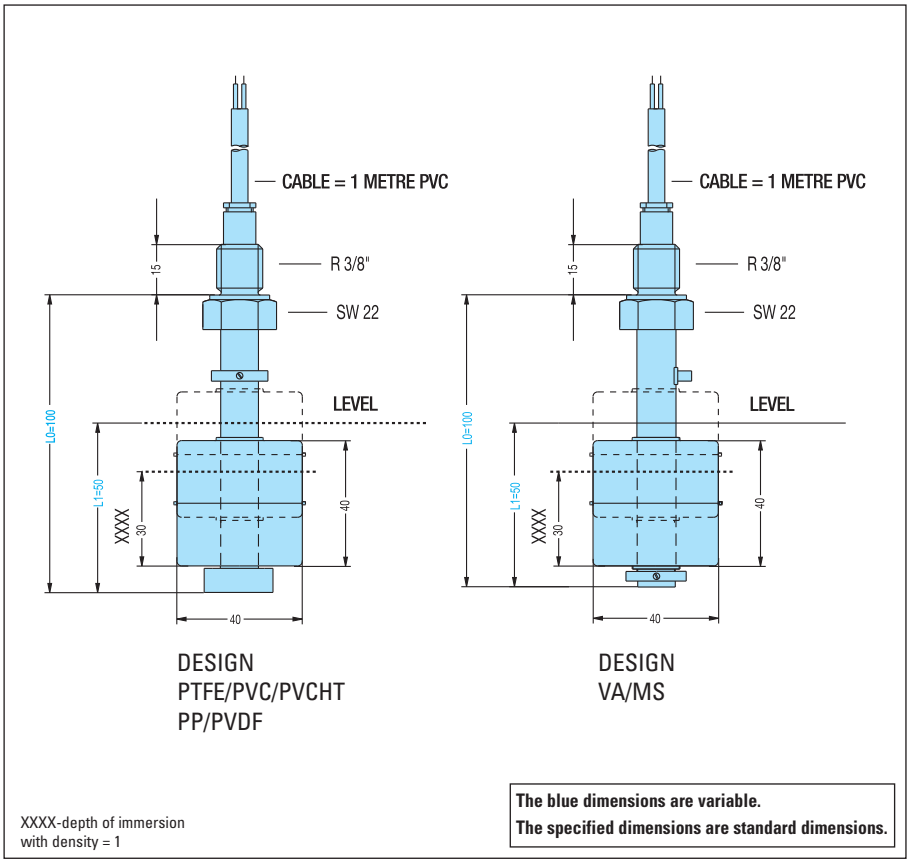

DESIGN
PTFE/PVC/PVCHT
PP/PVDF

DESIGN
VA/MS

XXXX-depth of immersion
with density = 1

The blue dimensions are variable.
The specified dimensions are standard dimensions.

L_0 = ... mm

L_1 = ... mm

L_2 = ... mm

L_3 = ... mm

L_4 = ... mm

				Type number
Connecting head/flange				
Float				
Cable silicone/PVC			Length in metres:	
Working temperature			°C:	
Working pressure			bar:	
Switching capacity	V:	A:	VA:	
Medium				
Specific gravity			g/cm³:	
Order quantity			Units:	
Installation	from the top: ☐		from the bottom: ☐	

Date .....

Ordered by .....
Company .....
Street .....
City .....

Signature .....

Mistakes and omissions excepted, subject to change without notice.

Jacob elektronische Mess- und Regelgeräte GmbH, Düsseldorfer Straße 16, D-71332 Waiblingen Tel.: 07151/56806 60 Fax: 07151/56806 79

Float switches

Type 232 - 292

Product advantages

- simple assembly
- long electrical lifetime due to implementation of dry-reed contacts
- high operating safety due to ventilation duct between slide tube and float

Characteristics

- system of protection IP 64 (IP 68)
- installation from the side, unpressurized also slide tube to the top possible
- multiple level heights can be monitored with one float
- alternatively normally open/normally closed contact function or change-over contact



Contact function with rising level	**Order ID** 232.00 □ .00	242.00 □ .00	252.00 □ .00	262.00 □ .00	272.00 □ .00	282.00 □ .00	292.00 □ .00
Normally open contact	0 0 1	0 0 1	0 0 1	0 0 1	0 0 1	0 0 1	0 0 1
Normally closed contact	0 0 2	0 0 2	0 0 2	0 0 2	0 0 2	0 0 2	0 0 2
Change-over contact	0 0 3	0 0 3	0 0 3	0 0 3	0 0 3	0 0 3	0 0 3
Components	Only upon request			**Material**		Only upon request	
Slide tube	PTFE	PVCHT	PVC	VA	PP	PVDF	MS
Float	PTFE[3]	PVCHT	PVC	VA	PP	PVDF	VA
Screw connection	PP	PP	MS	VA	PP	PP	MS
Operational data of the standard model [1]							
Working temperature Cont./temp. with PVC cable	—	80 °C / 90 °C	55 °C / 60 °C	90 °C / 90 °C	90 °C / 90 °C	—	90 °C / 90 °C
Working temperature Cont./temp. with silicone cable	—	80 °C / 90 °C	55 °C / 60 °C	150 °C / 150 °C	110 °C / 110 °C	—	150 °C / 150 °C
Max. admis. working pres.	—	3 bar	3 bar	3 bar[2]	3 bar	—	3 bar[2]

[1] **The data relate to the ambient temperature T = 20°C.**

Switching capacity Normally open contact/ normally closed contact/ change-over contact
230 V =/ ~
1.0 A 60 VA
Higher switching capacity upon request

Switching points (number) 1 normally open contact / normally closed contact / change-over contact with standard length upon request: max. 4 normally open contacts / normally closed contacts

Switching behaviour All functions are bistable.

□ Other designs upon request.

[2] Higher pressures upon request

[3] PTFE float ø 55 x 75

Mistakes and omissions excepted, subject to change without notice.

Order Fax

Float switches Type 232 - 292

The switch can be designed for up to 4 levels. The minimum distances are type dependent and are specifically set by the manufacturer. The desired levels can be indicated in the following list.

Please copy the order form, complete the list below with the desired dimensions, and then use the copy as order form.

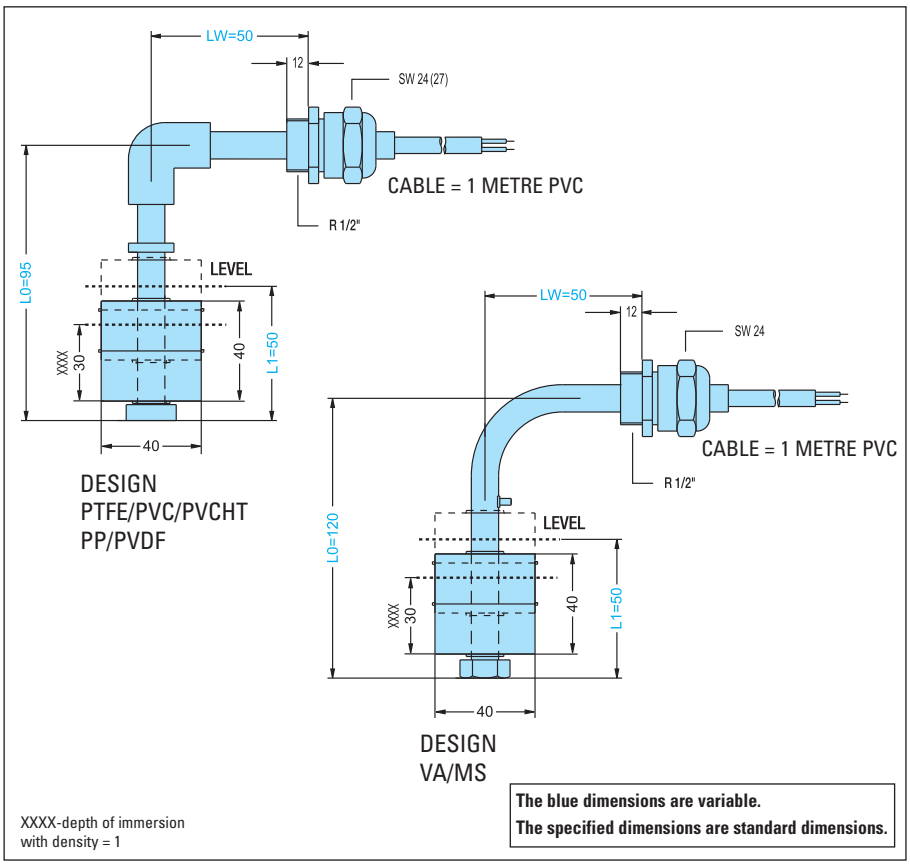

LW = ... **mm**

L_0 = ... **mm**

L_1 = ... **mm**

L_2 = ... **mm**

L_3 = ... **mm**

L_4 = ... **mm**

				Type number
Connecting head/flange				
Float				
Cable silicone/PVC			Length in metres:	
Working temperature			°C:	
Working pressure			bar:	
Switching capacity	V:	A:	VA:	
Medium				
Specific gravity			g/cm³:	
Order quantity			Units:	

Date .....

Ordered by .....

Company .....

Street .....

City .....

Signature .....

Mistakes and omissions excepted, subject to change without notice.

Float switches

Type 233 - 293

Product advantages

- simple assembly
- long electrical lifetime due to implementation of dry-reed contacts
- high operating safety due to ventilation duct between slide tube and float

Characteristics

- system of protection IP 64 (IP 68)
- installation in the cover of the container (from the top) or bottom of the container (from the bottom) possible
- multiple level heights can be monitored with one float
- alternatively normally open/normally closed contact function or change-over contact

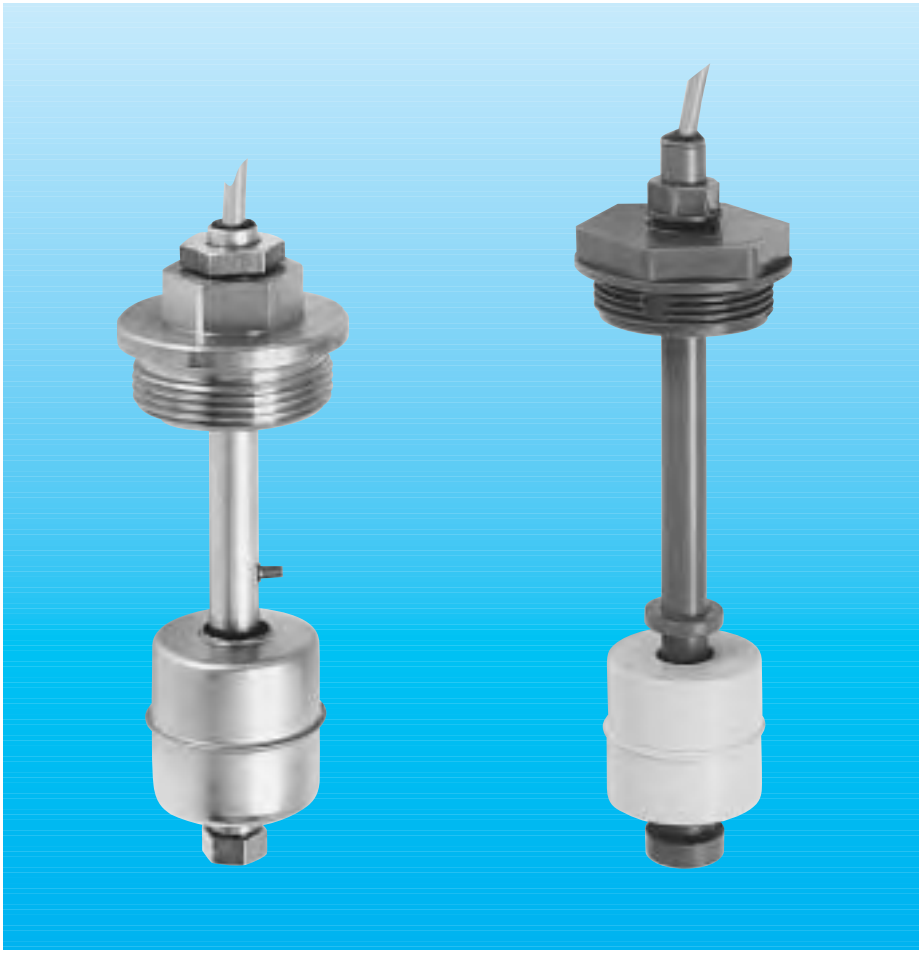

Contact function with rising level	**Order ID** 233.00 □ .00	243.00 □ .00	253.00 □ .00	263.00 □ .00	273.00 □ .00	283.00 □ .00	293.00 □ .00
Normally open contact	0 0 1	0 0 1	0 0 1	0 0 1	0 0 1	0 0 1	0 0 1
Normally closed contact	0 0 2	0 0 2	0 0 2	0 0 2	0 0 2	0 0 2	0 0 2
Change-over contact	0 0 3	0 0 3	0 0 3	0 0 3	0 0 3	0 0 3	0 0 3
Components	Only upon request			**Material**		Only upon request	
Slide tube	PTFE	PVCHT	PVC	VA	PP	PVDF	MS
Float	PTFE	PVCHT	PVC	VA	PP	PVDF	VA
Screw connection	PTFE[4)]	PP	PVC	VA	PP	PVDF	MS
Operational data of the standard model [1)]							
Working temperature Cont./temp. with PVC cable	—	80 °C / 90 °C	55 °C / 60 °C	90 °C / 90 °C	90 °C / 90 °C	—	90 °C / 90 °C
Working temperature Cont./temp. with silicone cable	—	80 °C / 90 °C	55 °C / 60 °C	150 °C / 150 °C	110 °C / 110 °C	—	150 °C / 150 °C
Max. admis. working pres.	—	3 bar	3 bar	3 bar	3 bar	—	3 bar
Screw connection fixed	—	3 bar	3 bar	20 bar	3 bar	—	20 bar

[1)] **The data relate to the ambient temperature T = 20°C.**

Switching capacity
Normally open contact/ normally closed contact/ change-over contact
230 V =/ ~
1.0 A 60 VA
Higher switching capacity upon request

Switching points (number)
1 normally open contact / normally closed contact / change-over contact with standard length upon request: max. 4 normally open contacts / normally closed contacts or max. 3 change-over contacts

Switching behaviour
All functions are bistable.

Other designs upon request.

[4)] Only 2" screw connection possible

Mistakes and omissions excepted, subject to change without notice.

Order Fax

Float switches Type 233 - 293

The switch can be designed for up to 4 levels. The minimum distances are type dependent and are specifically set by the manufacturer. The desired levels can be indicated in the following list.

Please copy the order form, complete the list below with the desired dimensions, and then use the copy as order form.

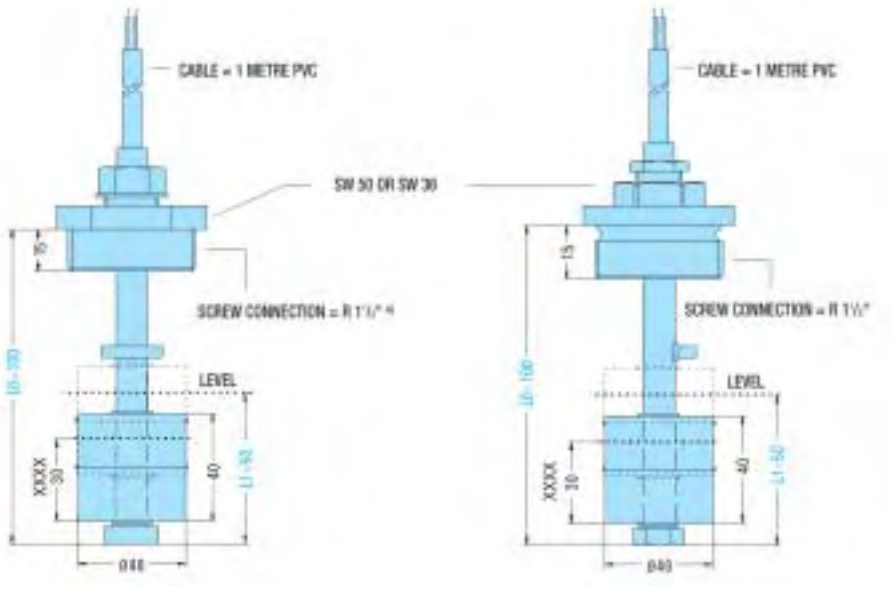

DESIGN
PTFE/PVC/PVCHT
PP/PVDF

DESIGN
VA/MS

XXXX-depth of immersion with density = 1

[4] PTFE 2"

The blue dimensions are variable.
The specified dimensions are standard dimensions.

L_0 = ... mm
L_1 = ... mm
L_2 = ... mm
L_3 = ... mm
L_4 = ... mm

				Type number
Connecting head/flange				
Float				
Cable silicone/PVC			Length in metres:	
Working temperature			°C:	
Working pressure			bar:	
Switching capacity	V:	A:	VA:	
Medium				
Specific gravity			g/cm³:	
Order quantity			Units:	
Installation	from the top: ☐		from the bottom: ☐	

Date .....

Ordered by .....
Company .....
Street .....
City .....

Signature .....

Mistakes and omissions excepted, subject to change without notice.

Float switches

Type 234 - 294

Product advantages

- simple assembly
- long electrical lifetime due to implementation of dry-reed contacts
- high operating safety due to ventilation duct between slide tube and float

Characteristics

- system of protection IP 67
- installation in the cover of the container (from the top) or bottom of the container (from the bottom) possible
- multiple level heights can be monitored with one float
- alternatively normally open/normally closed contact function or change-over contact



Contact function with rising level	**Order ID**						
	234.00 □ .00	**244.00 □ .00**	**254.00 □ .00**	**264.00 □ .00**	**274.00 □ .00**	**284.00 □ .00**	**294.00 □ .00**
Normally open contact	0 0 1	0 0 1	0 0 1	0 0 1	0 0 1	0 0 1	0 0 1
Normally closed contact	0 0 2	0 0 2	0 0 2	0 0 2	0 0 2	0 0 2	0 0 2
Change-over contact	0 0 3	0 0 3	0 0 3	0 0 3	0 0 3	0 0 3	0 0 3
Components	Only upon request			**Material**		Only upon request	
Slide tube	PTFE	PVCHT	PVC	VA	PP	PVDF	MS
Float	PTFE	PVCHT	PVC	VA	PP	PVDF	VA
Screw connection	PTFE[4]	PP	PVC	VA	PP	PVDF	MS
Anschlußkasten	ABS 95x65x57	ABS 95x65x57	ABS 95x65x57	ALU 80x80x60	ABS 95X65X57	ABS 95x65x57	ALU 80x80x60
Operational data of the standard model [1]							
Working temp. Cont./temp.	—	80 °C / 90 °C	55 °C / 60 °C	90 °C / 90 °C	90 °C / 90 °C	—	90 °C / 90 °C
possible w. temp. (u. request)	—	—	—	150 °C / 150 °C	110 °C / 110 °C	—	150 °C / 150 °C
Max. admis. working pres.	—	3 bar	3 bar	3 bar	3 bar	—	3 bar
Screw connection fixed	—	3 bar	3 bar	20 bar	3 bar	—	20 bar

[1] The data relate to the ambient temperature T = 20°C.

Switching capacity Normally open contact/ normally closed contact/ change-over contact
230 V =/ ~
1.0 A 60 VA
Higher switching capacity upon request
□

Switching points (number) 1 normally open contact / normally closed contact / change-over contact with standard length upon request: max. 4 normally open contacts / normally closed contacts or max. 3 change-over contacts

Switching behaviour All functions are bistable.

Other designs upon request.

[4] Only 2" screw connection possible

Mistakes and omissions excepted, subject to change without notice.

Order Fax

Float switches Type 234 - 294

The switch can be designed for up to 4 levels. The minimum distances are type dependent and are specifically set by the manufacturer. The desired levels can be indicated in the following list.

Please copy the order form, complete the list below with the desired dimensions, and then use the copy as order form.

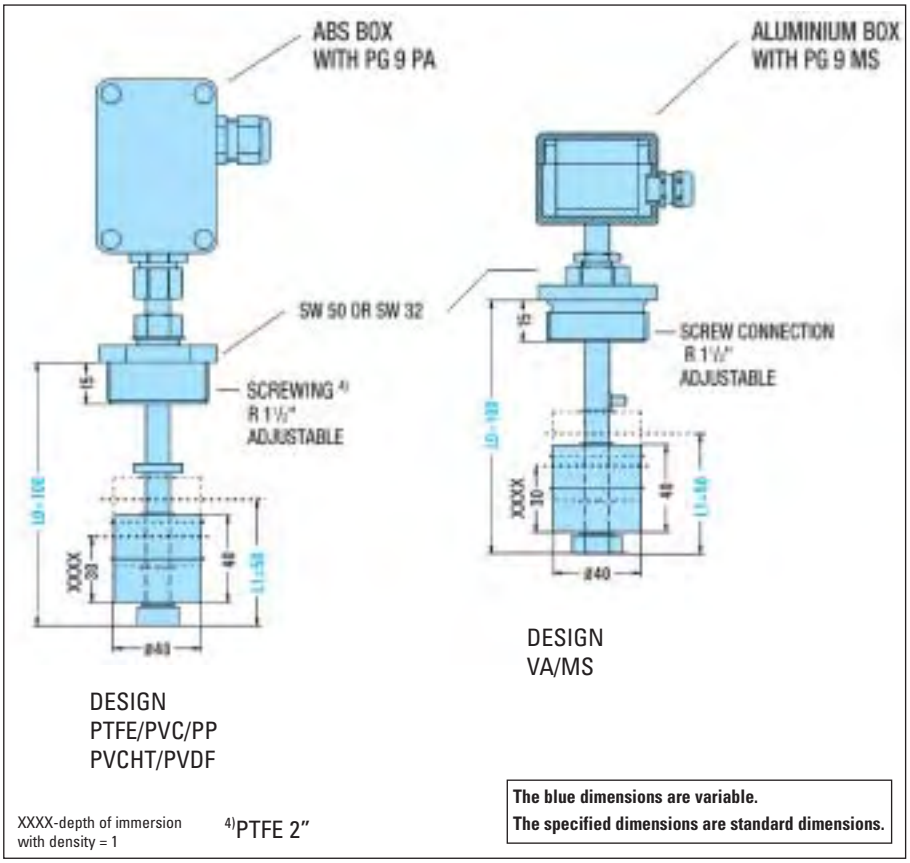

L_0 = ... mm

L_1 = ... mm

L_2 = ... mm

L_3 = ... mm

L_4 = ... mm

	Type number
Connecting head/flange	
Float	
Cable silicone/PVC	Length in metres:
Working temperature	°C:
Working pressure	bar:
Switching capacity	V: A: VA:
Medium	
Specific gravity	g/cm³:
Order quantity	Units:
Installation	from the top: ☐ from the bottom: ☐

Date .....

Ordered by .....

Company .....

Street .....

City .....

Signature .....

Mistakes and omissions excepted, subject to change without notice.

Jacob elektronische Mess- und Regelgeräte GmbH, Düsseldorfer Straße 16, D-71332 Waiblingen Tel.: 07151/56806 60 Fax: 07151/56806 79

Float switches

Type 235 - 295

Product advantages

- simple assembly
- long electrical lifetime due to implementation of dry-reed contacts
- high operating safety due to ventilation duct between slide tube and float

Characteristics

- system of protection IP 67
- lateral installation, unpressurized also slide tube to the top possible
- multiple level heights can be monitored with one float
- alternatively normally open/normally closed contact function or change-over contact

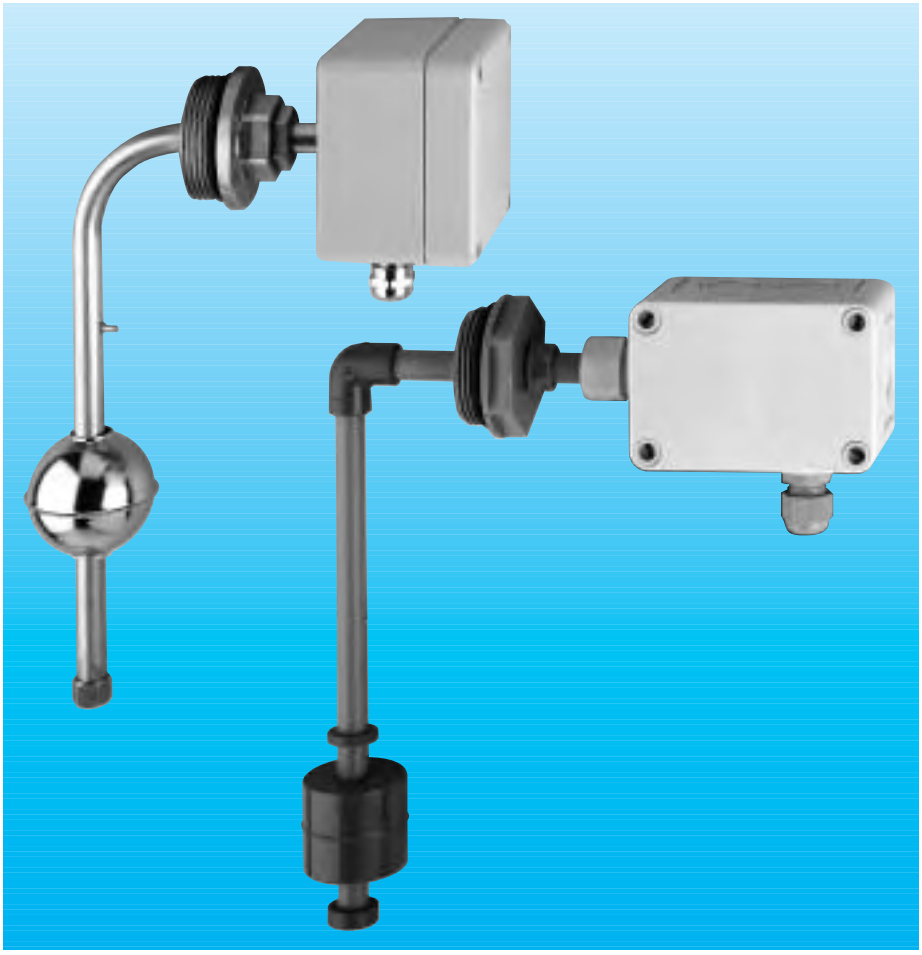

Contact function with rising level	Order ID 235.00 □ .00	245.00 □ .00	255.00 □ .00	265.00 □ .00	275.00 □ .00	285.00 □ .00	295.00 □ .00
Normally open contact	0 0 1	0 0 1	0 0 1	0 0 1	0 0 1	0 0 1	0 0 1
Normally closed contact	0 0 2	0 0 2	0 0 2	0 0 2	0 0 2	0 0 2	0 0 2
Change-over contact	0 0 3	0 0 3	0 0 3	0 0 3	0 0 3	0 0 3	0 0 3
Components	Only upon request			**Material**		Only upon request	
Slide tube	PTFE	PVCHT	PVC	VA	PP	PVDF	MS
Float	PTFE	PVCHT	PVC	VA	PP	PVDF	VA
Screw connection	PTFE[4)]	PP	PVC	VA	PP	PVDF	MS
Connecting box	ABS 95x65x57	ABS 95x65x57	ABS 95x65x57	ALU 80x80x60	ABS 95x65x57	ABS 95x65x57	ALU 80x80x60
Operational data of the standard model [1)]							
Working temp. Cont./temp.	—	80 °C / 90 °C	55 °C / 60 °C	90 °C / 90 °C	90 °C / 90 °C	—	90 °C / 90 °C
possible w. temp. (u. request)	—	—	—	150 °C / 150 °C	110 °C / 110 °C	—	150 °C / 150 °C
Max. admis. working pres.	—	3 bar	3 bar	3 bar[2)]	3 bar	—	3 bar[2)]

[1)] The data relate to the ambient temperature T = 20°C.

Switching capacity
Normally open contact/ normally closed contact/ change-over contact
230 V =/ ~
1.0 A 60 VA
Higher switching capacity upon request

□

Other designs upon request.

Switching points (number)
1 normally open contact / normally closed contact / change-over contact with standard length upon request: max. 4 normally open contacts / normally closed contacts or max. 3 change-over contacts

Switching behaviour
All functions are bistable.

[2)] Higher pressures upon request
[4)] Only 2" screw connection possible

Mistakes and omissions excepted, subject to change without notice.

Order Fax

Float switches Type 235 - 295

The switch can be designed for up to 4 levels. The minimum distances are type dependent and are specifically set by the manufacturer. The desired levels can be indicated in the following list.

Please copy the order form, complete the list below with the desired dimensions, and then use the copy as order form.

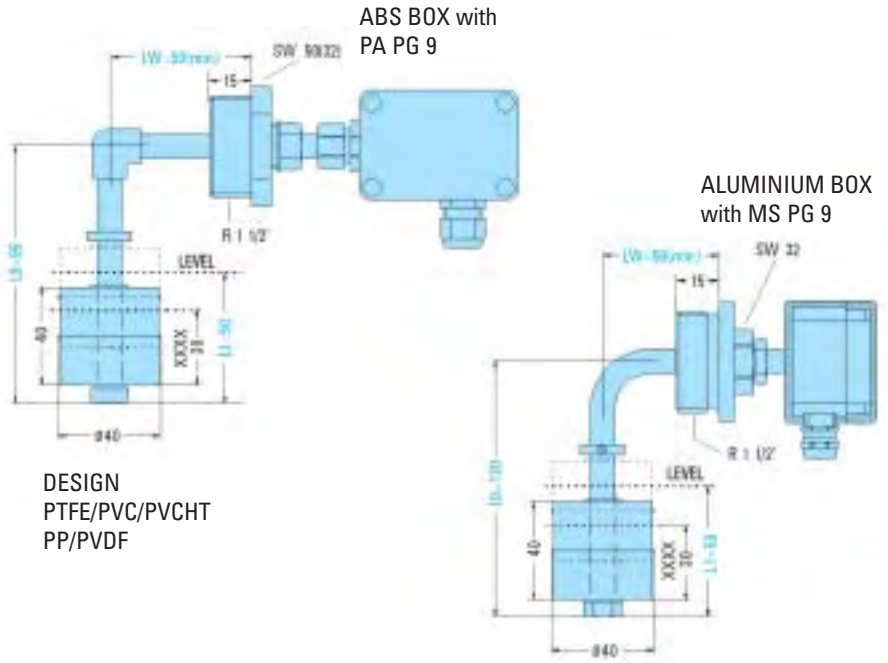

XXXX-depth of immersion with density = 1

4) PTFE 2"

The blue dimensions are variable.
The specified dimensions are standard dimensions.

LW = ... **mm**

L_0 = ... **mm**

L_1 = ... **mm**

L_2 = ... **mm**

L_3 = ... **mm**

L_4 = ... **mm**

	Type number
Connecting head/flange	
Float	
Cable silicone/PVC	Length in metres:
Working temperature	°C:
Working pressure	bar:
Switching capacity V: A:	VA:
Medium	
Specific gravity	g/cm³:
Order quantity	Units:

Date .....

Ordered by .....
Company .....
Street .....
City .....

Signature .....

Mistakes and omissions excepted, subject to change without notice.

Jacob elektronische Mess- und Regelgeräte GmbH, Düsseldorfer Straße 16, D-71332 Waiblingen Tel.: 07151/56806 60 Fax: 07151/56806 79

Float switches

Type 236 - 296

Product advantages

- simple assembly
- long electrical lifetime due to implementation of dry-reed contacts
- high operating safety due to ventilation duct between slide tube and float

Characteristics

- system of protection IP 65
- installation in the cover of the container (from the top) or bottom of the container (from the bottom) possible
- multiple level heights can be monitored with one float
- alternatively normally open/normally closed contact function or change-over contact

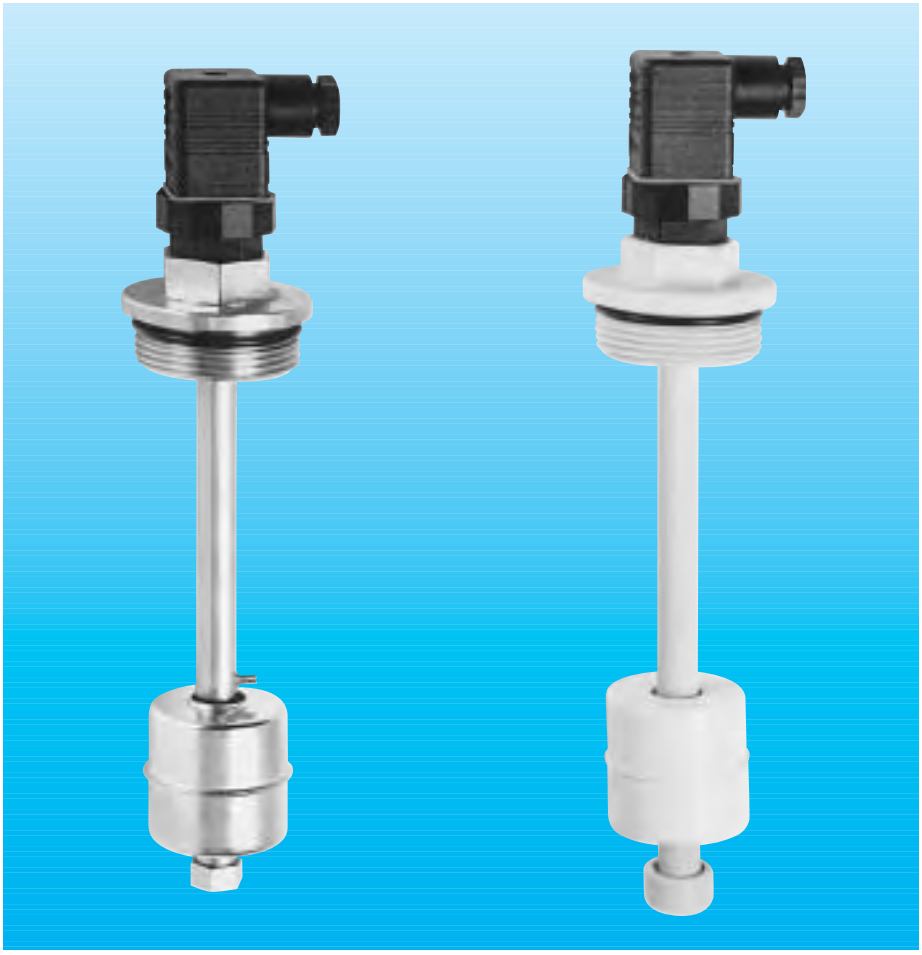

Contact function with rising level	**Order ID** 236.00 □ .00	246.00 □ .00	256.00 □ .00	266.00 □ .00	276.00 □ .00	286.00 □ .00	296.00 □ .00
Normally open contact	0 0 1	0 0 1	0 0 1	0 0 1	0 0 1	0 0 1	0 0 1
Normally closed contact	0 0 2	0 0 2	0 0 2	0 0 2	0 0 2	0 0 2	0 0 2
Change-over contact	0 0 3	0 0 3	0 0 3	0 0 3	0 0 3	0 0 3	0 0 3
Components	Only upon request			**Material**		Only upon request	
Slide tube	PTFE	PVCHT	PVC	VA	PP	PVDF	MS
Float	PTFE	PVCHT	PVC	VA	PP	PVDF	VA
Screw connection	PTFE[4]	PP	PVC	VA	PP	PVDF	MS
Plug acc. to DIN 43650	3-pole	3-pole	3-pole	3-pole + PE	3-pole	3-pole	3-pole + PE
Plug acc. to DIN 43050	6-pole	6-pole	6-pole	6-pole without PE	6-pole	6-pole	6-pole without PE
Operational data of the standard model [1]							
Working temp. Cont./temp	—	80 °C / 90 °C	55 °C / 60 °C	90 °C / 90 °C	90 °C / 90 °C	—	90 °C / 90 °C
possible w. temp. (u. request)	—	—	—	110 °C / 110 °C	110 °C / 110 °C	—	110 °C / 110 °C
Max. admis. working pres.	—	3 bar	3 bar	3 bar[2]	3 bar	—	3 bar[2]

[1] **The data relate to the ambient temperature T = 20°C.**

Switching capacity Normally open contact/ normally closed contact/ change-over contact 230 V =/ ~ 1.0 A 60 VA Higher switching capacity upon request □

Switching points (number) 1 normally open contact / normally closed contact / change-over contact with standard length upon request: max. 4 normally open contacts / normally closed contacts or max. 2 change-over contacts

Switching behaviour All functions are bistable.

Other designs upon request.

In case of more than 2 switching points, different plugs are used.

[2] Higher pressures upon request

[4] Only 2" screw connection possible

Mistakes and omissions excepted, subject to change without notice.

Order Fax

Float switches Type 236 - 296

The switch can be designed for up to 4 levels. The minimum distances are type dependent and are specifically set by the manufacturer. The desired levels can be indicated in the following list.

Please copy the order form, complete the list below with the desired dimensions, and then use the copy as order form.

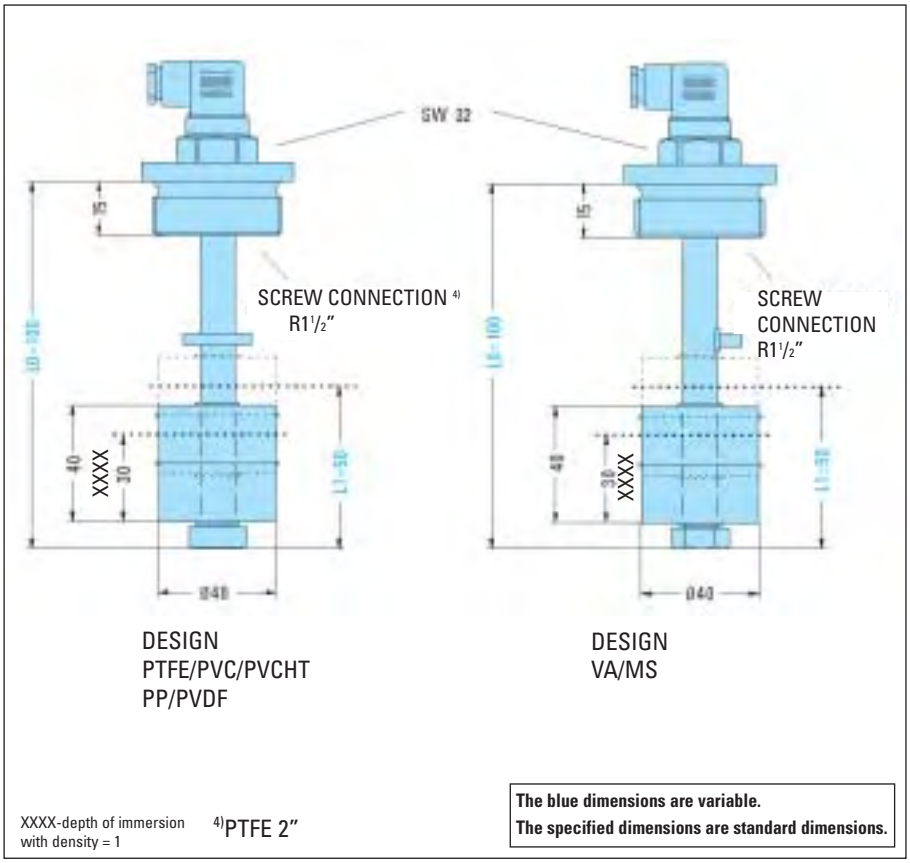

L_0 = ... mm

L_1 = ... mm

L_2 = ... mm

L_3 = ... mm

L_4 = ... mm

				Type number
Connecting head/flange				
Float				
Cable silicone/PVC			Length in metres:	
Working temperature			°C:	
Working pressure			bar:	
Switching capacity	V:	A:	VA:	
Medium				
Specific gravity			g/cm³:	
Order quantity			Units:	
Installation	from the top: ☐		from the bottom: ☐	

Date .....

Ordered by .....

Company .....

Street .....

City .....

Signature .....

Mistakes and omissions excepted, subject to change without notice.

Float switches

Type 237 - 297

Product advantages

- simple assembly
- long electrical lifetime due to implementation of dry-reed contacts
- high operating safety due to ventilation duct between slide tube and float

Characteristics

- system of protection IP 65
- installation in the cover of the container (from the top) or bottom of the container (from the bottom) possible
- multiple level heights can be monitored with one float
- alternatively normally open/normally closed contact function or change-over contact

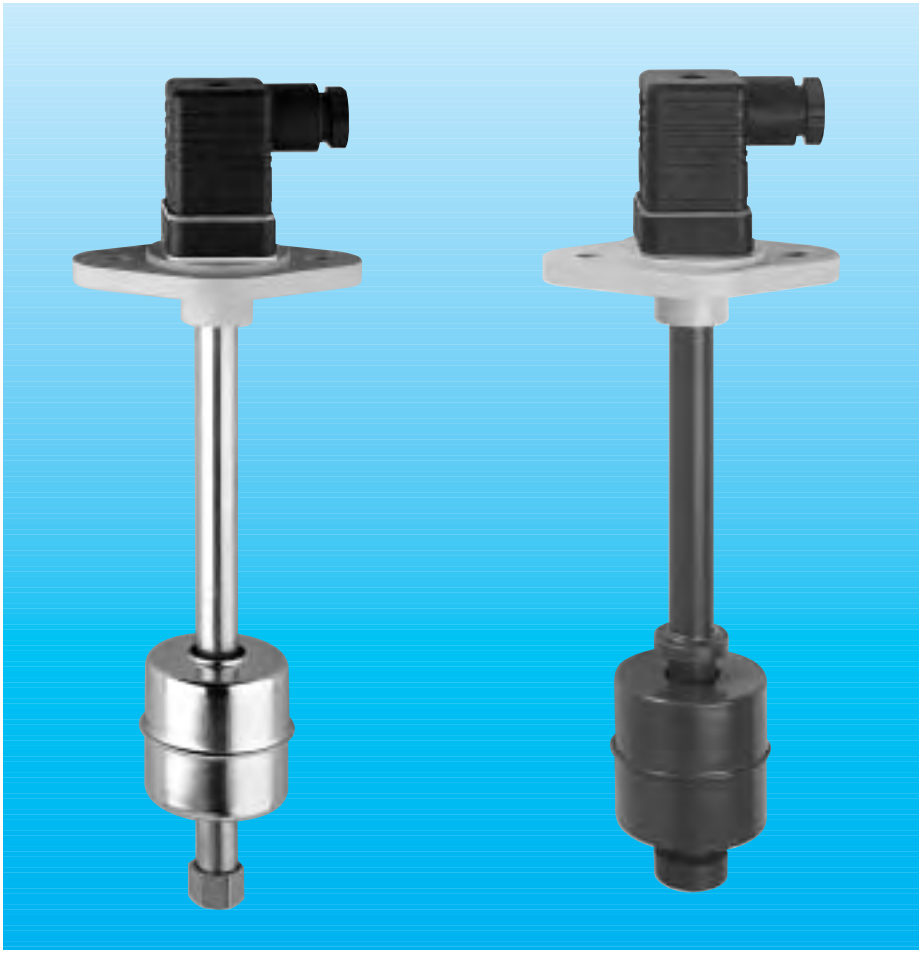

Contact function with rising level	**Order ID** 237.00 □ .00	247.00 □ .00	257.00 □ .00	267.00 □ .00	277.00 □ .00	287.00 □ .00	297.00 □ .00
Normally open contact	0 0 1	0 0 1	0 0 1	0 0 1	0 0 1	0 0 1	0 0 1
Normally closed contact	0 0 2	0 0 2	0 0 2	0 0 2	0 0 2	0 0 2	0 0 2
Change-over contact	0 0 3	0 0 3	0 0 3	0 0 3	0 0 3	0 0 3	0 0 3
Components	Only upon request			**Material**		Only upon request	
Slide tube	PTFE	PVCHT	PVC	VA	PP	PVDF	MS
Float	PTFE[3]	PVCHT	PVC	VA	PP	PVDF	VA
Oval flange	PP	PP	PP	PP	PP	PP	PP
Plug acc. to DIN 43650	3-pole	3-pole	3-pole	3-pole + PE	3-pole	3-pole	3-pole + PE
Plug acc. to DIN 43050	6-pole	6-pole	6-pole	6-pole without PE	6-pole	6-pole	6-pole without PE
Operational data of the standard model [1]							
Working temp. Cont./temp.	—	80 °C / 90 °C	55 °C / 60 °C	90 °C / 90 °C	90 °C / 90 °C	—	90 °C / 90 °C
possible w. temp. (u. request)	—	—	—	110 °C / 110 °C	110 °C / 110 °C	—	110 °C / 110 °C
Max. admis. working pres.	—	3 bar	3 bar	5 bar	3 bar	—	5 bar

[1] **The data relate to the ambient temperature T = 20°C.**

Switching capacity Normally open contact/ normally closed contact/ change-over contact
230 V =/ ~
1.0 A 60 VA
Higher switching capacity upon request
□

Switching points (number) 1 normally open contact / normally closed contact / change-over contact with standard length upon request: max. 4 normally open contacts / normally closed contacts or max. 2 change-over contacts

Switching behaviour All functions are bistable.

Other designs upon request.

In case of more than 2 switching points, different plugs are used.

[3] PTFE float Ø 55 x 75

Mistakes and omissions excepted, subject to change without notice.

Order Fax

Float switches Type 237 - 297

The switch can be designed for up to 4 levels. The minimum distances are type dependent and are specifically set by the manufacturer. The desired levels can be indicated in the following list.
Please copy the order form, complete the list below with the desired dimensions, and then use the copy as order form.

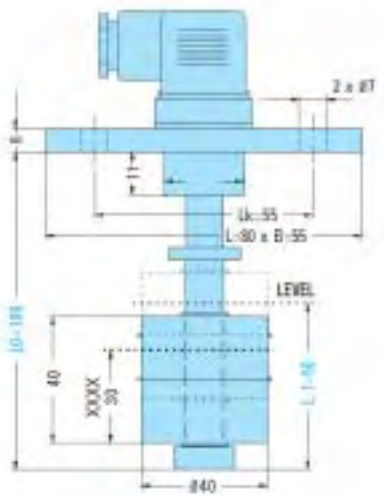

DESIGN
PTFE/PVC/PVCHT
PP/PVDF

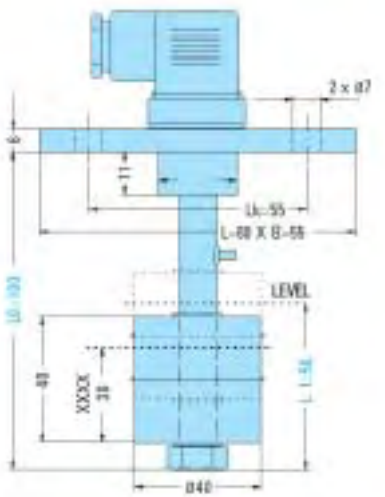

DESIGN
VA/MS

XXXX-depth of immersion
with density = 1

The blue dimensions are variable.
The specified dimensions are standard dimensions.

L_0 = ... mm
L_1 = ... mm
L_2 = ... mm
L_3 = ... mm
L_4 = ... mm

				Type number
Connecting head/flange				
Float				
Cable silicone/PVC			Length in metres:	
Working temperature			°C:	
Working pressure			bar:	
Switching capacity	V:	A:	VA:	
Medium				
Specific gravity			g/cm³:	
Order quantity			Units:	
Installation	from the top: ☐		from the bottom: ☐	

Date .....

Ordered by .....
Company .....
Street .....
City .....

Signature .....

Mistakes and omissions excepted, subject to change without notice.

Float switches

Type 238 - 298

Product advantages

- simple assembly
- long electrical lifetime due to implementation of dry-reed contacts
- high operating safety due to ventilation duct between slide tube and float

Characteristics

- system of protection IP 65
- installation in the cover of the container (from the top) or bottom of the container (from the bottom) possible
- multiple level heights can be monitored with one float
- alternatively normally open/normally closed contact function or change-over contact

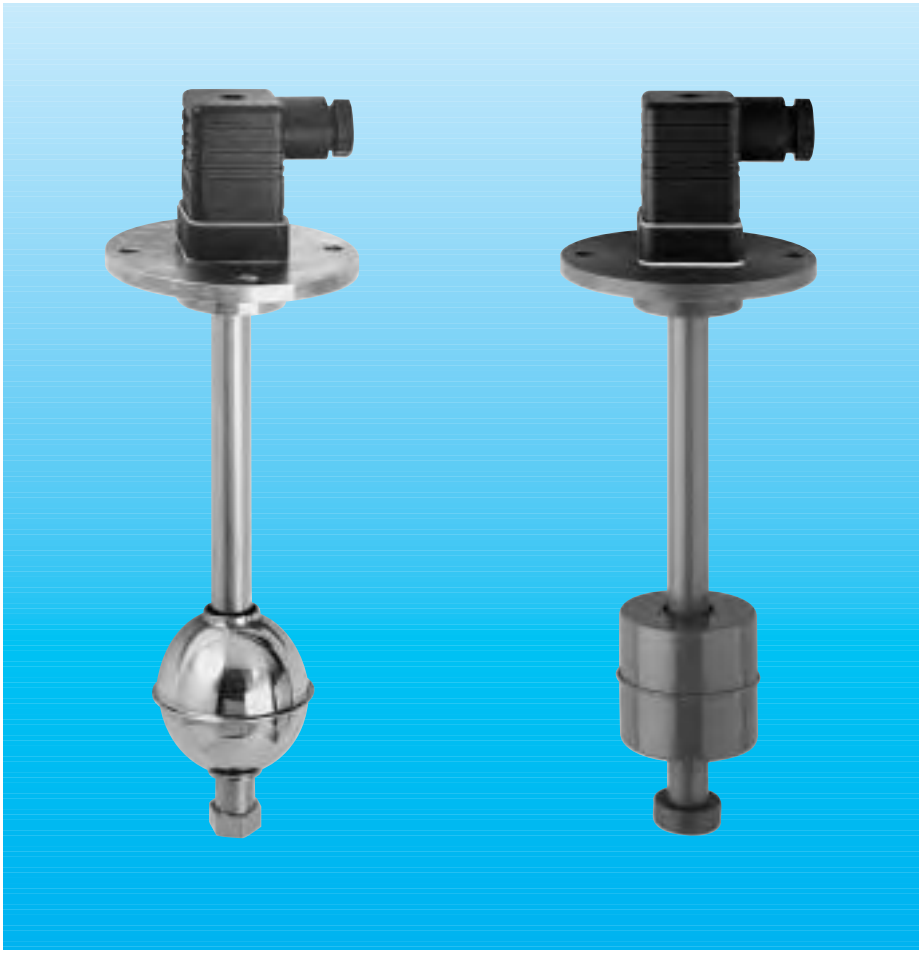

Contact function with rising level	**Order ID** 238.00 □ .00	248.00 □ .00	258.00 □ .00	268.00 □ .00	278.00 □ .00	288.00 □ .00	298.00 □ .00
Normally open contact	0 0 1	0 0 1	0 0 1	0 0 1	0 0 1	0 0 1	0 0 1
Normally closed contact	0 0 2	0 0 2	0 0 2	0 0 2	0 0 2	0 0 2	0 0 2
Change-over contact	0 0 3	0 0 3	0 0 3	0 0 3	0 0 3	0 0 3	0 0 3
Components	Only upon request			**Material**		Only upon request	
Slide tube	PTFE	PVCHT	PVC	VA	PP	PVDF	MS
Float	PTFE	PVCHT	PVC	VA	PP	PVDF	VA
Round flange	PTFE[5)]	PVCHT	PVC	VA	PP	PVDF	MS
Plug acc. to DIN 43650	3-pole	3-pole	3-pole	3-pole + PE	3-pole	3-pole	3-pole + PE
Plug acc. to DIN 43050	6-pole	6-pole	6-pole	6-pole without PE	6-pole	6-pole	6-pole without PE
Operational data of the standard model [1)]							
Working temp. Cont./temp.	—	80 °C / 90 °C	55 °C / 60 °C	90 °C / 90 °C	90 °C / 90 °C	—	90 °C / 90 °C
Possible working temp.	—	—	—	110 °C / 110 °C	110 °C / 110 °C	—	110 °C / 110 °C
Max. admis. working pres.	—	3 bar	3 bar	10 bar	3 bar	—	10 bar

[1)] **The data relate to the ambient temperature T = 20°C.**

Switching capacity Normally open contact/ normally closed contact/ change-over contact
230 V =/ ~
1.0 A 60 VA
Higher switching capacity upon request
□

Switching points (number) 1 normally open contact / normally closed contact / change-over contact with standard length upon request: max. 3 normally open contacts / normally closed contacts or max. 2 change-over contacts

Switching behaviour All functions are bistable.

Other designs upon request.

In case of more than 2 switching points, different plugs are used.

[5)] Only possible with flange from DIN 65 PN .. upwards.

Mistakes and omissions excepted, subject to change without notice.

Order Fax

Float switches Type 238 - 298

Standard flanges with plug

Ø74 LK = 60

Standard floats

VA = cylinder Ø42X42

PTFE/PVCHT/PVC/PA/PP = cylinder Ø40X40

Other flanges

with connection box
made of ALUMINIUM or ABS
Only upon request!!

Flanges acc. to DIN 2527

DN	50 PN 16/25	VA 1.4571 / St 37
DN	65 PN 16/25	VA 1.4571 / St 37
DN	80 PN 16/25	VA 1.4571 / St 37
DN	100 PN 16/25	VA 1.4571 / St 37
DN	125 PN 16/25	VA 1.4571 / St 37
DN	150 PN 16/25	VA 1.4571 / St 37

We also manufacture plastic flanges according to your wishes.

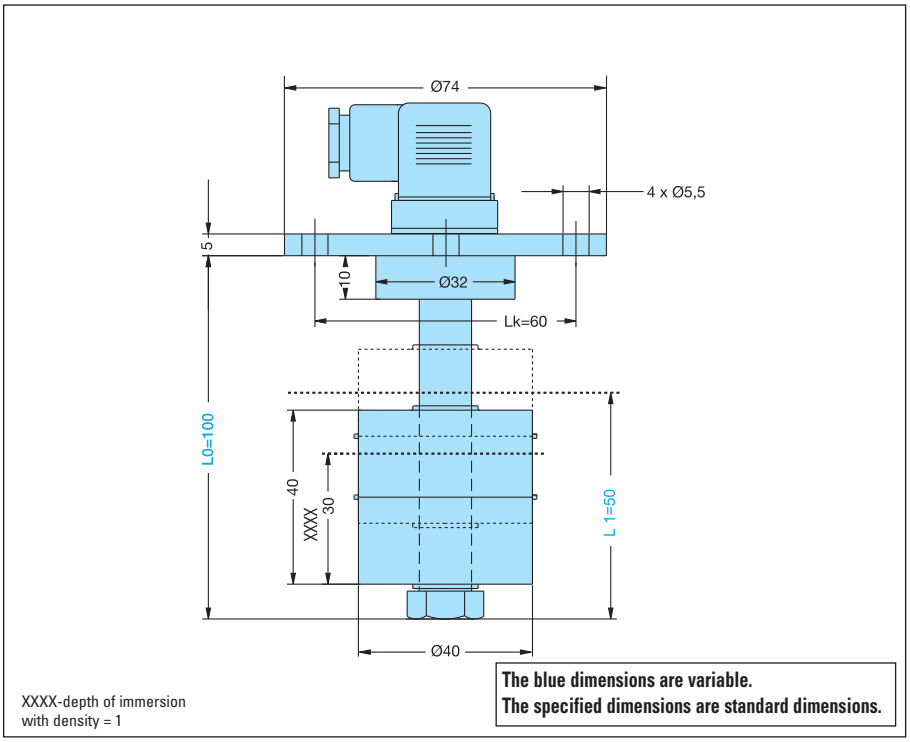

XXXX-depth of immersion with density = 1

The blue dimensions are variable.
The specified dimensions are standard dimensions.

The switch can be designed for up to 4 levels. The minimum distances are type dependent and are specifically set by the manufacturer. The desired levels can be indicated in the following list.

Please copy the order form, complete the list below with the desired dimensions, and then use the copy as order form.

	Type number
Connecting head/flange	
Float	
Cable silicone/PVC	Length in metres:
Working temperature	°C:
Working pressure	bar:
Switching capacity	V: A: VA:
Medium	
Specific gravity	g/cm³:
Order quantity	Units:
Installation	from the top: ☐ from the bottom: ☐

Date .....

Ordered by .....
Company .....
Street .....
City .....

Signature .....

L_0 = ... mm
L_1 = ... mm
L_2 = ... mm
L_3 = ... mm
L_4 = ... mm

Mistakes and omissions excepted, subject to change without notice.

Float switches

Type 269 - 299

Product advantages

- for high pressures
- simple assembly
- long electrical lifetime due to implementation of dry-reed contacts
- high operating safety due to ventilation duct between slide tube and float

Characteristics

- system of protection IP 67 (IP 68)
- installation in the cover of the container (from the top)
- alternatively normally open/normally closed contact function or change-over contact

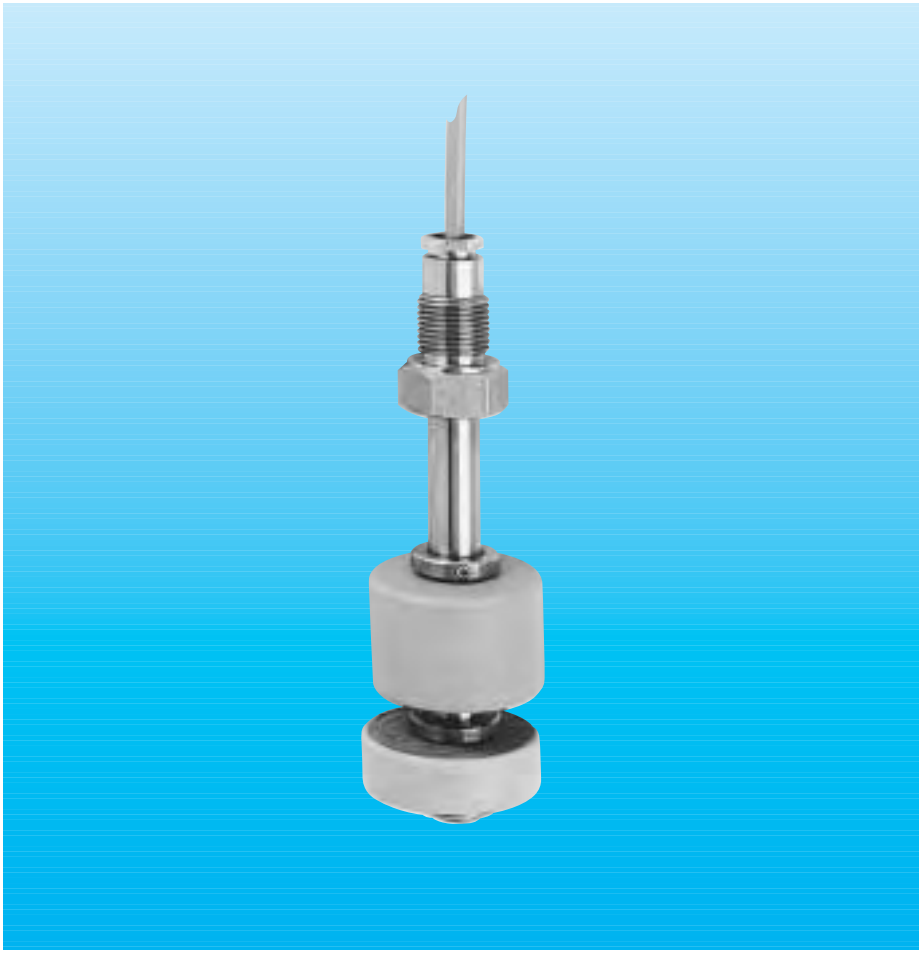

Contact function with rising level	Order ID		269.00 □ .00	279.00 □ .00		299.00 □ .00
Normally open contact	—	—	00 1	00 1	—	00 1
Normally closed contact	—	—	00 2	00 2	—	00 2
Change-over contact			00 3	00 3		00 3
Components	**Material**					
Slide tube	—	—	VA	PP	—	MS
Float	—	—	PP	PP	—	PP
Screw connection	—	—	VA	PP	—	MS
Operational data of the standard model [1]						
Working temperature Cont./temp. with PVC cable	—	—	90 °C / 90 °C	90 °C / 90 °C	—	90 °C / 90 °C
Working temperature Cont./temp. with silicone cable	—	—	110 °C / 130 °C	110 °C / 130 °C	—	110 °C / 130 °C
Max. admis. working pres.	—	—	100 bar	25 bar	—	100 bar

[1] **The data relate to the ambient temperature T = 20°C.**

Switching capacity Normally open contact/ 230 V =/ ~ 1.0 A 60 VA Higher switching capacity upon request

□

Switching points (number) 1 normally open contact / normally closed contact / change-over contact with standard length upon request: max. 2 normally open contacts / normally closed contacts or max. 2 change-over contacts

Switching behaviour All functions are bistable.

Other designs upon request

Upon request also available with 1 1/2" and 2" screw connection

Mistakes and omissions excepted, subject to change without notice.

Order Fax

Float switches Type 269 - 299

The switch can be designed for up to 2 levels. The minimum distances are type dependent and are specifically set by the manufacturer. The desired levels can be indicated in the following list.

Please copy the order form, complete the list below with the desired dimensions, and then use the copy as order form.

In case of more than 1 switching point, the minimum distance is 150 mm.

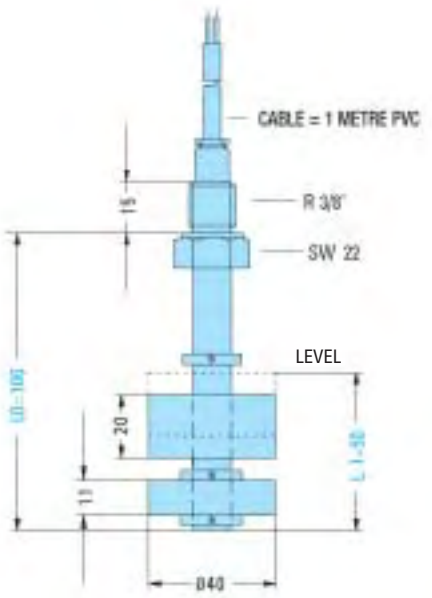

DESIGN
VA/MS

> density=0,99

The blue dimensions are variable.
The specified dimensions are standard dimensions.

L_0 = ... mm
L_1 = ... mm
L_2 = ... mm
L_3 = ... mm
L_4 = ... mm

	Type number
Connecting head/flange	
Float	
Cable silicone/PVC	Length in metres:
Working temperature	°C:
Working pressure	bar:
Switching capacity	V: A: VA:
Medium	
Specific gravity	g/cm³:
Order quantity	Units:
Installation	from the top: ☐ from the bottom: ☐

Date .....

Ordered by .....
Company .....
Street .....
City .....

Signature .....

Mistakes and omissions excepted, subject to change without notice.

Jacob elektronische Mess- und Regelgeräte GmbH, Düsseldorfer Straße 16, D-71332 Waiblingen Tel.: 07151/56806 60 Fax: 07151/56806 79

Float switches

Type 264....20

Product advantages

- the position of the switching points is continuously adjustable over the overall length even after starting
- all switching points can be positioned at the same height
- simple assembly
- long electrical lifetime due to implementation of dry-reed contacts
- high operating safety due to ventilation duct between slide tube and float

Characteristics

- system of protection IP 67
- only available in 1.4571
- installation in the cover of the container (from the top) or bottom of the container (from the bottom) possible
- multiple level heights can be monitored with one float
- alternatively normally open/normally closed contact function



Contact function with rising level	Order ID 264.□.20
Normally open contact	1 1 1
Normally closed contact	2 2 2
Components	**Material**
Slide tube	VA
Float [6]	VA
Screw connection R 2" [4]	VA
Operational data of the standard model [1]	
Working temp. Cont./temp.	100 °C / 110 °C
Max. admis. working pres.	20 bar

[1] **The data relate to the ambient temperature T = 20°C.**

Switching capacity Normally open contact/ normally closed contact 230 V =/ ~ 1.0 A 30 VA

□

Switching points (number) max. 3 normally open contacts / normally closed contacts (combinable) **Change-over contact not possible!**

Switching behaviour All functions are bistable.

Factory length min. 500 mm available
Up to 3000 mm graded in 500 mm steps
Special length upon request
Other designs upon request

[4] Other screw connections upon request

[6] with density > 1 ball float Ø 52
with density < 1 cyl. float Ø 77 x 92

Mistakes and omissions excepted, subject to change without notice.

Order Fax

Float switches Type 264....20

The switch can be designed for up to 3 levels. The minimum distances are type dependent and are specifically set by the manufacturer. The desired levels can be indicated in the following list.

Please copy the order form, complete the list below with the desired dimensions, and then use the copy as order form.

The switching points are roughly preset during the fabrication.

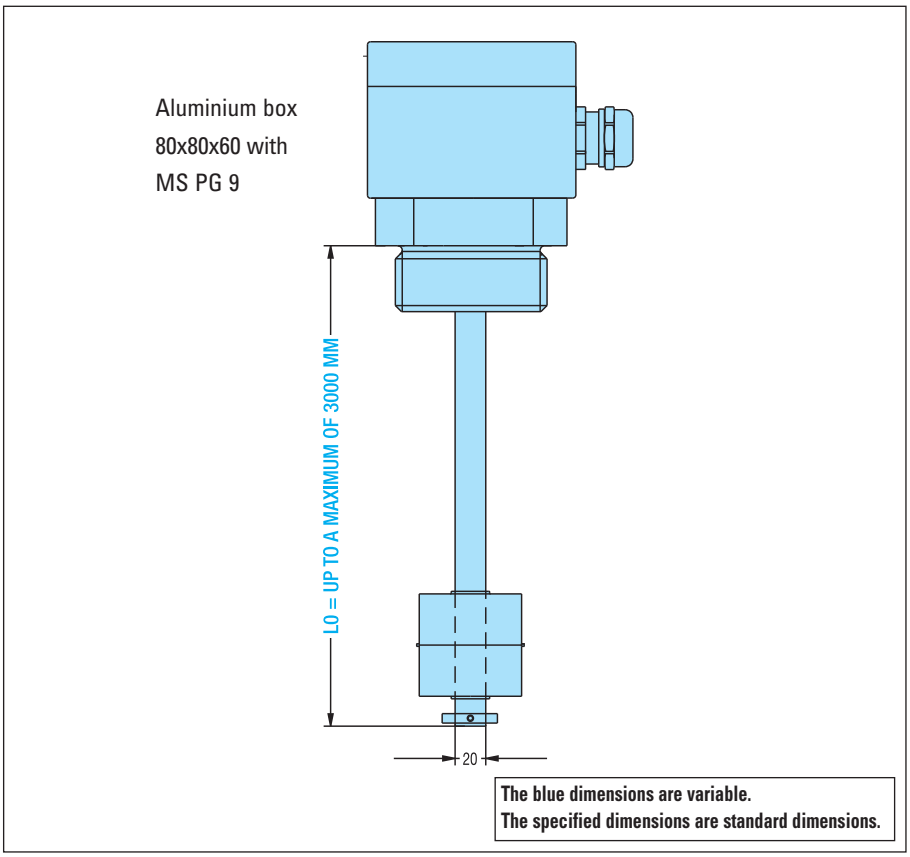

L_0 = ... mm

L_1 = ca. ..... mm

L_2 = ca. ..... mm

L_3 = ca. ..... mm

	Type number
Connecting head/flange	
Float	
Working temperature	°C:
Working pressure	bar:
Switching capacity	V: A: VA:
Medium	
Specific gravity	g/cm³:
Order quantity	Units:
Installation	from the top: ☐ from the bottom: ☐

Date .....

Ordered by .....

Company .....

Street .....

City .....

Signature .....

Mistakes and omissions excepted, subject to change without notice.

Float switches

Type 234.....VE to 294.....VE

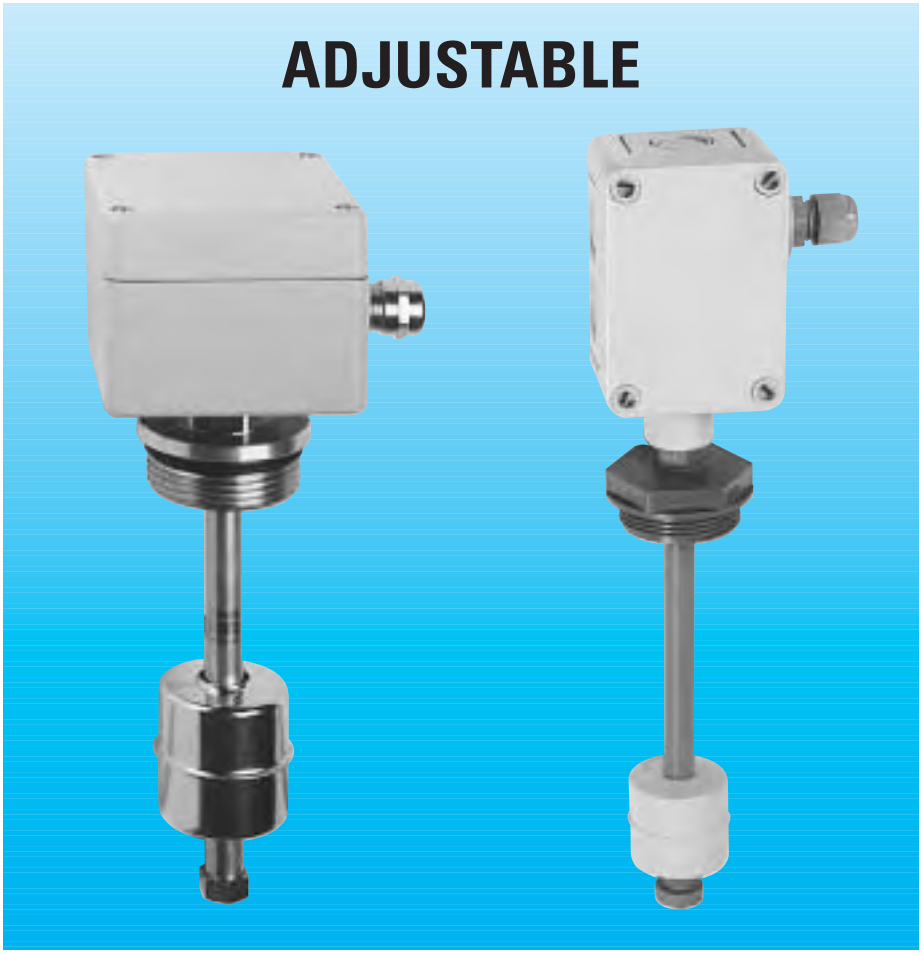

Product advantages

- Switching points may be adjusted separately
- Easy mounting
- High electric durability through use of dry-reed contacts
- High operational safety through an air gap between slide tube and float

Characteristics

- Enclosure rating IP 67
- Mounting in the vessel lid (from top)
- You may monitor up to three levels with one float
- Optional opening or closing function

Contact Function at rising level	Order ID 234.00 .VE	244.00 .VE	254.00 .VE	264.00 .VE	274.00 .VE	284.00 .VE	294.00 .VE
Normally open contact	0 0 1	0 0 1	0 0 1	0 0 1	0 0 1	0 0 1	0 0 1
Normally closed contact	0 0 2	0 0 2	0 0 2	0 0 2	0 0 2	0 0 2	0 0 2

Components	Only upon request			Material		Only upon request	
Slide tube	PTFE	PVCHT	PVC	VA	PP	PVDF	MS
Float	PTFE	PVCHT	PVC	VA	PP	PVDF	VA
Screw connection	PTFE[4)]	PP	PVC	VA	PP	PVDF	MS
Connector box	ABS 95x65x57	ABS 95x65x57	ABS 95x65x57	ALU 80x80x60	ABS 95X65X57	ABS 95x65x57	ALU 80x80x60
Operational data of the standard model [1)]							
Working temp. Cont./temp.	—	80 °C / 90 °C	55 °C / 60 °C	90 °C / 90 °C	90 °C / 90 °C	—	90 °C / 90 °C
Max. admis. working pres.	—	3 bar	3 bar	20 bar	3 bar	—	20 bar

Other designs upon request

[1)] **The data relate to the ambient temperature T = 20°C.**

[4)] Only 2“ screwing possible.

Switching capacity
Normally open contact/ normally closed contact/ 230 V =/ ~ 1.0 A 30 VA
Higher rupturing capacity on request

Switching points (number)
Normally open contact / Normally closed contact with a maximum of 3 points

Switching behaviour
All functions are bistable.

The position of the switching points may be adjusted separately and continously by inserting or withdrawing the corresponding cables. After completion of the adjustment the cap nut of the cable connection inside the connector box must be tightened thoroughly.

Mistakes and omissions excepted, subject to change without notice.

Order Fax

Float switches Type 234.....VE to 294.....VE

Please copy the order form, complete the list below with the desired dimensions, and then use the copy as order form.

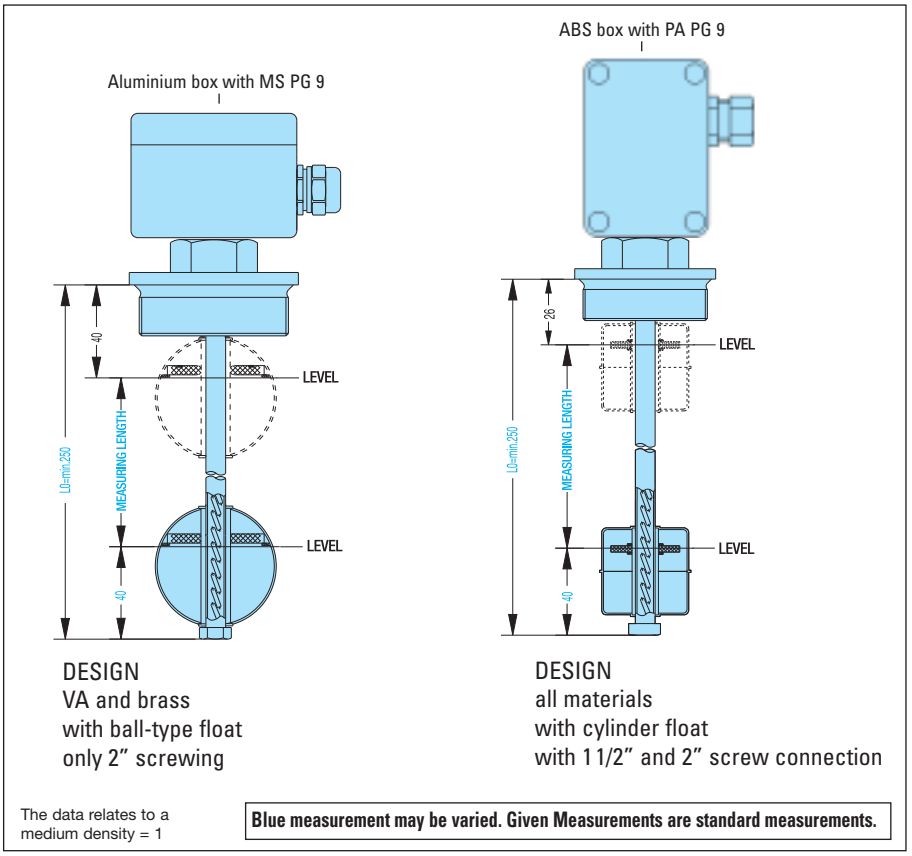

DESIGN
VA and brass
with ball-type float
only 2" screwing

DESIGN
all materials
with cylinder float
with 1 1/2" and 2" screw connection

The data relates to a medium density = 1

Blue measurement may be varied. Given Measurements are standard measurements.

L_O = ... mm

	Type number
Connecting head/flange	
Float	
Working temperature	°C:
Working pressure	bar:
Medium	
Specific gravity	g/cm³:
Order quantity	Units:

Date .....

Ordered by .....
Company .....
Street .....
City .....

Signature .....

Mistakes and omissions excepted, subject to change without notice.

Jacob elektronische Mess- und Regelgeräte GmbH, Düsseldorfer Straße 16, D-71332 Waiblingen Tel.: 07151/56806 60 Fax: 07151/56806 79

Float switches
Type 431 - 491



Product advantages

- quasi-continuous measurement over the entire way of the float
- simple assembly
- long electrical lifetime due to implementation of dry-reed contacts
- high operating safety due to ventilation duct between slide tube and float

Characteristics

- system of protection IP 67 (IP 68)
- installation in the cover of the container (from the top) or bottom of the container (from the bottom) possible

	Order ID						
	431.001.□	441.001.□	451.001.□	461.001.□	471.001.□	481.001.□	491.001.□
Contact grid 5 mm	05	05	05	05	05	05	05
Contact grid 10 mm	10	10	10	10	10	10	10
Components	Only upon request			**Material**		Only upon request	
Slide tube	PTFE	PVCHT	PVC	VA	PP	PVDF	MS
Float	PTFE	PVCHT	PVC	VA	PP	PVDF	VA
Screw connection	PTFE	PP	PVC	VA	PP	PVDF	MS
Operational data of the standard model [1]							
Working temp. Cont./temp.	—	80 °C /90 °C	55 °C / 60 °C	90 °C / 90 °C	90 °C / 90 °C	—	90 °C / 90 °C
Max. admis. working pres.	—	3 bar	3 bar	20 bar	3 bar	—	20 bar

[1] **The data relate to the ambient temperature T = 20°C.**

Mistakes and omissions excepted, subject to change without notice.

Other designs upon request

Order Fax

Float switches Type 431 - 491

Please copy the order form, complete the list below with the desired dimensions, and then use the copy as order form.

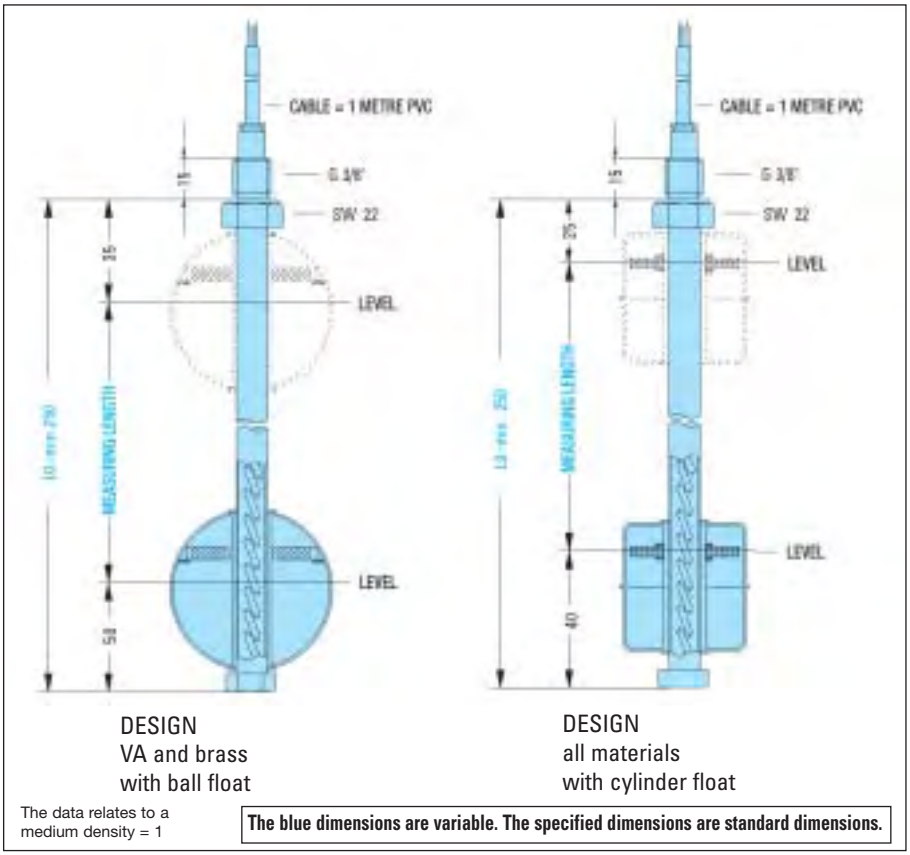

DESIGN
VA and brass
with ball float

DESIGN
all materials
with cylinder float

The data relates to a medium density = 1

The blue dimensions are variable. The specified dimensions are standard dimensions.

L_0 = ... mm

Measuring length ..... mm

		Type number
Connecting head/flange		
Float		
Cable silicone/PVC	Length in metres:	
Working temperature	°C:	
Working pressure	bar:	
Medium		
Specific gravity	g/cm³:	
Order quantity	Units:	
Installation	from the top: ☐	from the bottom: ☐

Date .....

Ordered by .....
Company .....
Street .....
City .....

Signature .....

Mistakes and omissions excepted, subject to change without notice.

Jacob elektronische Mess- und Regelgeräte GmbH, Düsseldorfer Straße 16, D-71332 Waiblingen Tel.: 07151/56806 60 Fax: 07151/56806 79

Float switches
Type 432 - 492



Product advantages

- simple assembly
- long electrical lifetime due to implementation of dry-reed contacts
- high operating safety due to ventilation duct between slide tube and float
- quasi-continuous measurement over the entire way of the float

Characteristics

- system of protection IP 67 (IP 68)
- lateral installation, unpressurized also slide tube to the top possible

	Order ID						
	432.001.☐	442.001.☐	452.001.☐	462.001.☐	472.001.☐	482.001.☐	492.001.☐
Contact grid 5 mm	05	05	05	05	05	05	05
Contact grid 10 mm	10	10	10	10	10	10	10
Components	Only upon request			**Material**		Only upon request	
Slide tube	PTFE	PVCHT	PVC	VA	PP	PVDF	MS
Float	PTFE	PVCHT	PVC	VA	PP	PVDF	VA
Screw connection	PTFE	PP	PVC	VA	PP	PVDF	MS
Operational data of the standard model [1]							
Working temp. Cont./temp.	—	80 °C /90 °C	55 °C / 60 °C	90 °C / 90 °C	90 °C / 90 °C	—	90 °C / 90 °C
Max. admis. working pres.	—	3 bar	3 bar	20 bar	3 bar	—	20 bar

[1] **The data relate to the ambient temperature T = 20°C.**

Mistakes and omissions excepted, subject to change without notice.

Other designs upon request

Order Fax

Float switches Type 432 - 492

Please copy the order form, complete the list below with the desired dimensions, and then use the copy as order form.

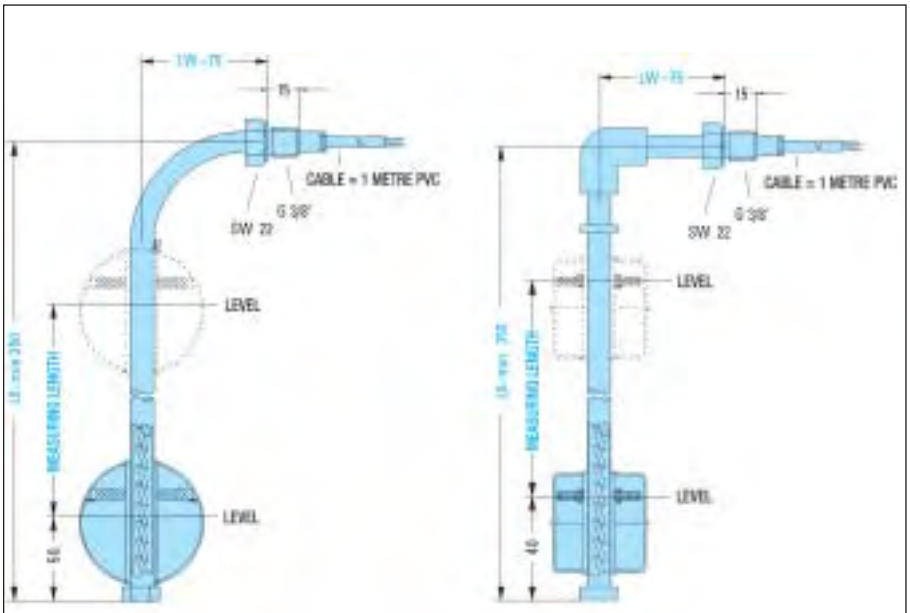

DESIGN
VA and brass
with ball float

DESIGN
all materials
with cylinder float

The data relates to a medium density = 1

The blue dimensions are variable.
The specified dimensions are standard dimensions.

L_0 = ... mm

Measuring length ..... mm

Clear opening CO ..... mm

	Type number
Connecting head/flange	
Float	
Cable silicone/PVC	Length in metres:
Working temperature	°C:
Working pressure	bar:
Medium	
Specific gravity	g/cm³:
Order quantity	Units:

Date .....

Ordered by .....
Company .....
Street .....
City .....

Signature .....

Mistakes and omissions excepted, subject to change without notice.

Jacob elektronische Mess- und Regelgeräte GmbH, Düsseldorfer Straße 16, D-71332 Waiblingen Tel.: 07151/56806 60 Fax: 07151/56806 79

Float switches
Type 433 - 493



Product advantages

- simple assembly
- long electrical lifetime due to implementation of dry-reed contacts
- high operating safety due to ventilation duct between slide tube and float
- quasi-continuous measurement over the entire way of the float

Characteristics

- system of protection IP 67 (IP 68)
- installation in the cover of the container (from the top) or bottom of the container (from the bottom) possible

	Order ID						
	433.001.☐	443.001.☐	453.001.☐	463.001.☐	473.001.☐	483.001.☐	493.001.☐
Contact grid 5 mm	05	05	05	05	05	05	05
Contact grid 10 mm	10	10	10	10	10	10	10
Components	Only upon request			**Material**		Only upon request	
Slide tube	PTFE	PVCHT	PVC	VA	PP	PVDF	MS
Float	PTFE[3]	PVCHT	PVC	VA	PP	PVDF	VA
Screw connection	PTFE[4]	PP	PVC	VA	PP	PVDF	MS
Operational data of the standard model [1]							
Working temp. Cont./temp.	—	80 °C /90 °C	55 °C / 60 °C	90 °C / 90 °C	90 °C / 90 °C	—	90 °C / 90 °C
Max. admis. working pres.	—	3 bar	3 bar	20 bar	3 bar	—	20 bar

[1] **The data relate to the ambient temperature T = 20°C.**

[3] PTFE float Ø 55 x 75

[4] Only 2“ screw connections possible

Other designs upon request

Mistakes and omissions excepted, subject to change without notice.

Order Fax

Float switches Type 433 - 493

Please copy the order form, complete the list below with the desired dimensions, and then use the copy as order form.

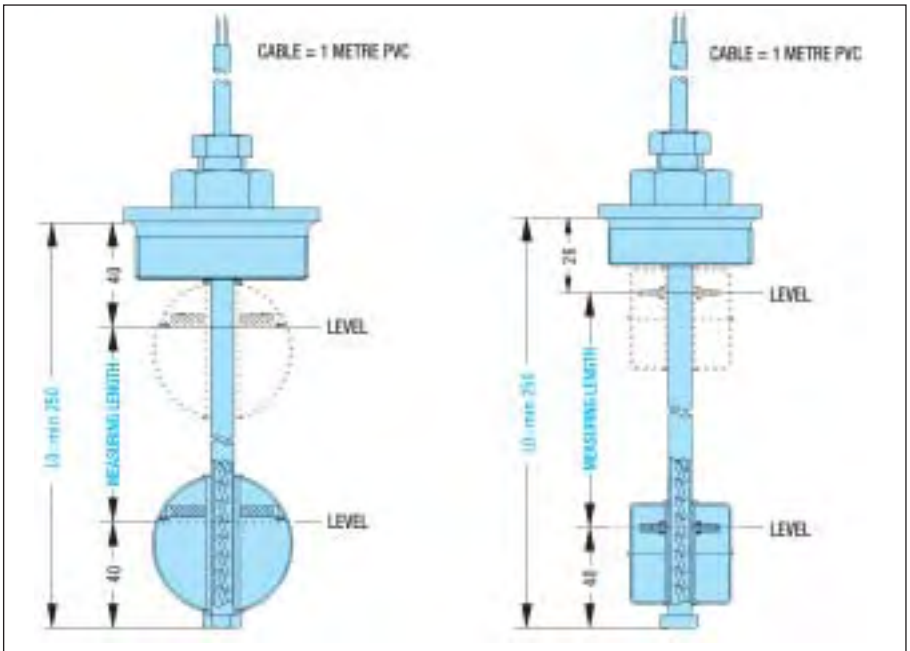

DESIGN
VA and brass
with ball float
only with 2" screw connection

DESIGN
all materials
with cylinder float
with 1 1/2" and 2" screw connection

The data relates to a medium density = 1

The blue dimensions are variable. The specified dimensions are standard dimensions.

L_0 = ... mm

Measuring length ..... mm

		Type number
Connecting head/flange		
Float		
Cable silicone/PVC	Length in metres:	
Working temperature	°C:	
Working pressure	bar:	
Medium		
Specific gravity	g/cm³:	
Order quantity	Units:	
Installation	from the top: ☐	from the bottom: ☐

Date .....

Ordered by .....
Company .....
Street .....
City .....

Signature .....

Mistakes and omissions excepted, subject to change without notice.

Float switches
Type 434 - 494



Product advantages

- simple assembly
- long electrical lifetime due to implementation of dry-reed contacts
- high operating safety due to ventilation duct between slide tube and float
- quasi-continuous measurement over the entire way of the float

Characteristics

- system of protection IP 67
- installation in the cover of the container (from the top) or bottom of the container (from the bottom) possible

	Order ID						
	434.001.☐	444.001.☐	454.001.☐	464.001.☐	474.001.☐	484.001.☐	494.001.☐
Contact grid 5 mm	05	05	05	05	05	05	05
Contact grid 10 mm	10	10	10	10	10	10	10
Components	Only upon request			**Material**		Only upon request	
Slide tube	PTFE	PVCHT	PVC	VA	PP	PVDF	MS
Float	PTFE[3]	PVCHT	PVC	VA	PP	PVDF	VA
Screw connection	PTFE[4]	PP	PVC	VA	PP	PVDF	MS
Connecting box	ABS 95x65x57	ABS 95x65x57	ABS 95x65x57	ALU 80x80x60	ABS 95x65x57	ABS 95x65x57	ALU 80x80x60
Operational data of the standard model [1]							—
Working temp. Cont./temp.	—	80 °C /90 °C	55 °C / 60 °C	90 °C / 90 °C	90 °C / 90 °C	—	90 °C / 90 °C
Max. admis. working pres.	—	3 bar	3 bar	20 bar	3 bar	—	20 bar

[1] The data relate to the ambient temperature T = 20°C.

[3] PTFE float Ø 55 x 75

[4] Only 2" screw connection possible

Other designs upon request

Mistakes and omissions excepted, subject to change without notice.

Order Fax

Float switches Type 434 - 494

Please copy the order form, complete the list below with the desired dimensions, and then use the copy as order form.

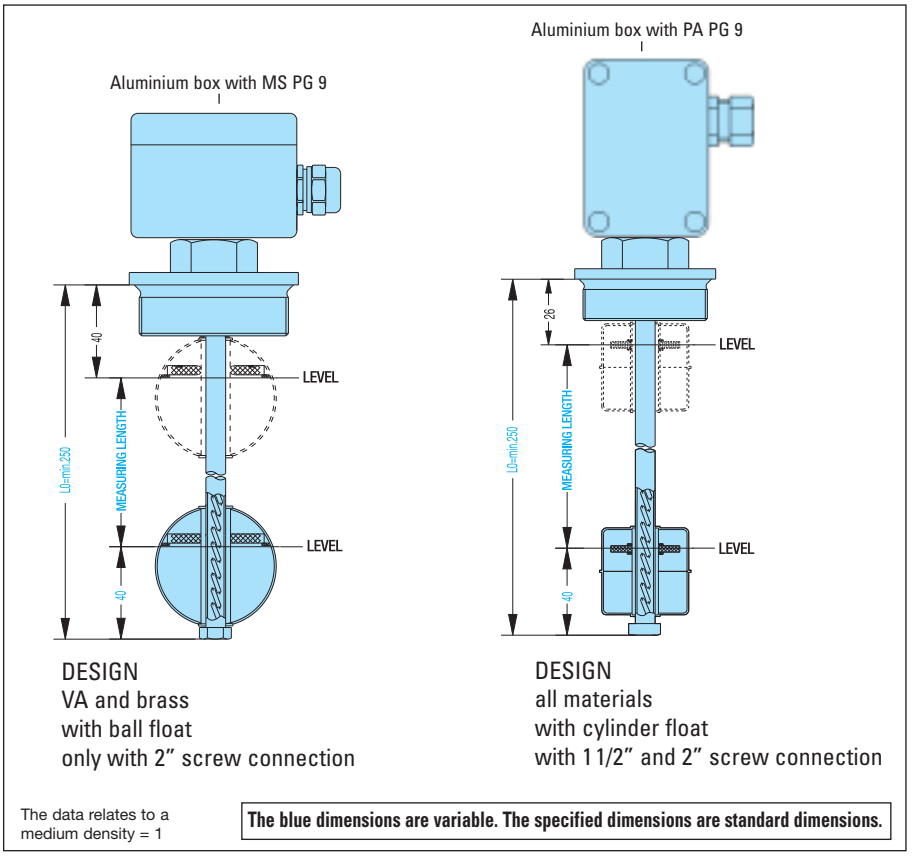

DESIGN
VA and brass
with ball float
only with 2" screw connection

DESIGN
all materials
with cylinder float
with 1 1/2" and 2" screw connection

The data relates to a medium density = 1

The blue dimensions are variable. The specified dimensions are standard dimensions.

L_0 = ... mm

Measuring length ..... mm

		Type number
Connecting head/flange		
Float		
Working temperature		°C:
Working pressure		bar:
Medium		
Specific gravity		g/cm³:
Order quantity		Units:
Installation	from the top: ☐	from the bottom: ☐

Date .....

Ordered by .....
Company .....
Street .....
City .....

Signature .....

Mistakes and omissions excepted, subject to change without notice.

Float switches
Type 435 - 495



Product advantages

- simple assembly
- long electrical lifetime due to implementation of dry-reed contacts
- high operating safety due to ventilation duct between slide tube and float
- quasi-continuous measurement over the entire way of the float

Characteristics

- system of protection IP 67
- lateral installation, unpressurized also slide tube to the top possible

	Order ID						
	435.001. ☐	**445.001.** ☐	**455.001.** ☐	**465.001.** ☐	**475.001.** ☐	**485.001.** ☐	**495.001.** ☐
Contact grid 5 mm	05	05	05	05	05	05	05
Contact grid 10 mm	10	10	10	10	10	10	10
Components	Only upon request			**Material**	Only upon request		
Slide tube	PTFE	PVCHT	PVC	VA	PP	PVDF	MS
Float	PTFE[3]	PVCHT	PVC	VA	PP	PVDF	VA
Screw connection	PTFE[4]	PP	PVC	VA	PP	PVDF	MS
Connecting box	ABS 95x65x57	ABS 95x65x57	ABS 95x65x57	ALU 80x80x60	ABS 95x65x57	ABS 95x65x57	ALU 80x80x60
Operational data of the standard model [1]							
Working temp. Cont./temp.	—	80 °C /90 °C	55 °C / 60 °C	90 °C / 90 °C	90 °C / 90 °C	—	90 °C / 90 °C
Max. admis. working pres.	—	3 bar	3 bar	3 bar	3 bar	—	3 bar
Screw connection fixed	—	3 bar	3 bar	20 bar	3 bar	—	20 bar

[1] **The data relate to the ambient temperature T = 20°C.**

[3] PTFE float Ø 55 x 75

[4] Only 2" screw connection possible

Other designs upon request

Mistakes and omissions excepted, subject to change without notice.

Order Fax

Float switches Type 435 - 495

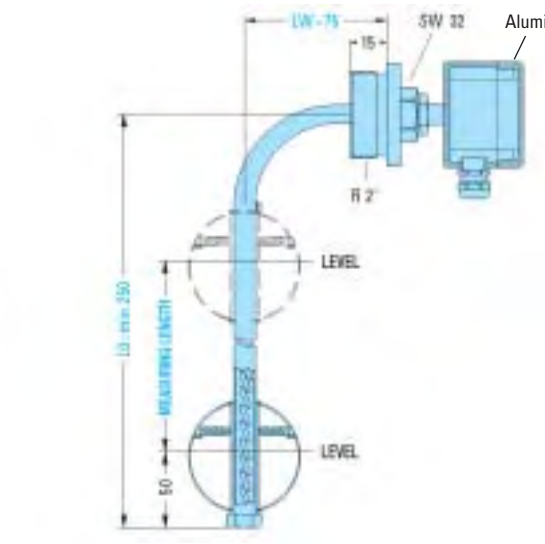

DESIGN
VA and brass
with ball float

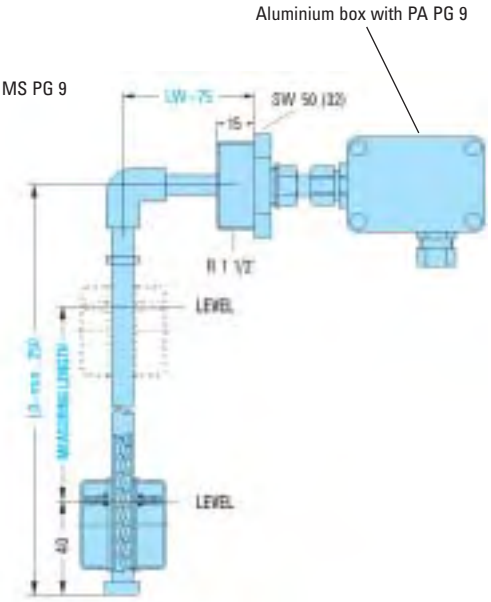

DESIGN
all materials
with cylinder float

The data relates to a medium density = 1

The blue dimensions are variable.
The specified dimensions are standard dimensions.

Please copy the order form, complete the list below with the desired dimensions, and then use the copy as order form.

L_0 = ... mm

Measuring length ..... mm

Clear opening CO ..... mm

	Type number
Connecting head/flange	
Float	
Working temperature	°C:
Working pressure	bar:
Medium	
Specific gravity	g/cm³:
Order quantity	Units:

Date .....

Ordered by .....
Company .....
Street .....
City .....

Signature .....

Mistakes and omissions excepted, subject to change without notice.

Float switches
Type 436 - 496



Product advantages

- simple assembly
- long electrical lifetime due to implementation of dry-reed contacts
- high operating safety due to ventilation duct between slide tube and float
- quasi-continuous measurement over the entire way of the float

Characteristics

- system of protection IP 65
- installation in the cover of the container (from the top) or bottom of the container (from the bottom) possible

	Order ID						
	436.001.☐	446.001.☐	456.001.☐	466.001.☐	476.001.☐	486.001.☐	496.001.☐
Contact grid 5 mm	05	05	05	05	05	05	05
Contact grid 10 mm	10	10	10	10	10	10	10
Components	Only upon request			**Material**		Only upon request	
Slide tube	PTFE	PVCHT	PVC	VA	PP	PVDF	MS
Float	PTFE[3]	PVCHT	PVC	VA	PP	PVDF	VA
Screw connection	PTFE[4]	PP	PVC	VA	PP	PVDF	MS
Plug acc. to DIN 43650	3-pole	3-pole	3-pole	3-pole + PE	3-pole	3-pole	3-pole + PE
Operational data of the standard model [1]							
Working temp. Cont./temp.	—	80 °C /90 °C	55 °C / 60 °C	90 °C / 90 °C	90 °C / 90 °C	—	90 °C / 90 °C
Max. admis. working pres.	—	3 bar	3 bar	20 bar	3 bar	—	20 bar

[1] **The data relate to the ambient temperature T = 20°C.**

[3] PTFE float Ø 55 x 75

[4] Only 2" screw connections possible

Other designs upon request

Mistakes and omissions excepted, subject to change without notice.

Order Fax

Float switches Type 436 - 496

Please copy the order form, complete the list below with the desired dimensions, and then use the copy as order form.

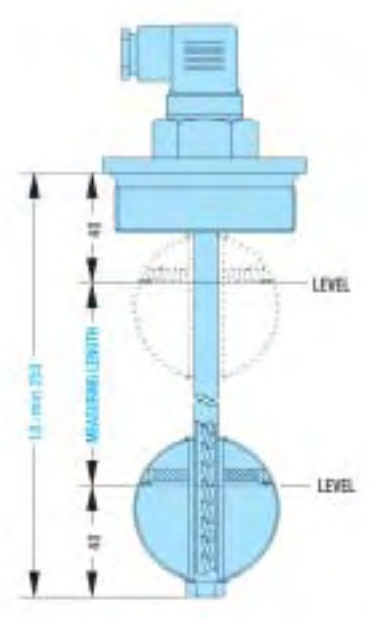

DESIGN
VA and brass
with ball float only
with 2" screw connection

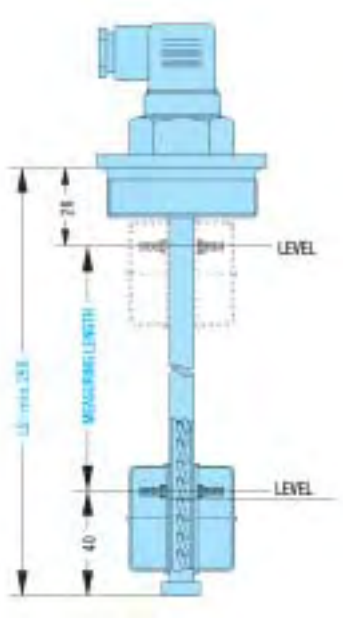

DESIGN
all materials
with cylinder float
with 1 1/2" and 2" screw connection

The data relates to a medium density = 1

The blue dimensions are variable.
The specified dimensions are standard dimensions.

L_0 = ... mm

Measuring length ..... mm

		Type number
Connecting head/flange		
Float		
Working temperature		°C:
Working pressure		bar:
Medium		
Specific gravity		g/cm³:
Order quantity		Units:
Installation	from the top: ☐	from the bottom: ☐

Date .....

Ordered by .....
Company .....
Street .....
City .....

Signature .....

Mistakes and omissions excepted, subject to change without notice.

Jacob elektronische Mess- und Regelgeräte GmbH, Düsseldorfer Straße 16, D-71332 Waiblingen Tel.: 07151/568060 Fax: 07151/568079

Float switches
Type 447 - 497



Product advantages

- simple assembly
- long electrical lifetime due to implementation of dry-reed contacts
- high operating safety due to ventilation duct between slide tube and float
- quasi-continuous measurement over the entire way of the float

Characteristics

- system of protection IP 65
- installation in the cover of the container (from the top) or bottom of the container (from the bottom) possible

	Order ID —	447.001.☐	457.001.☐	467.001.☐	477.001.☐	487.001.☐	497.001.☐
Contact grid 5 mm	—	05	05	05	05	05	05
Contact grid 10 mm		10	10	10	10	10	10
Components				**Material**	Only upon request		
Slide tube	—	PVCHT	PVC	VA	PP	PVDF	MS
Float	—	PVCHT	PVC	VA	PP	PVDF	VA
Oval flange	—	PP	PP	PP	PP	PP	PP
Plug acc. DIN 43650	—	3-pole	3-pole	3-pole + PE	3-pole	3-pole	3-pole + PE
Operational data of the standard model [1]							
Working temp. Cont./temp.	—	80 °C /90 °C	55 °C / 60 °C	90 °C / 90 °C	90 °C / 90 °C	—	90 °C / 90 °C
Max. admis. working pres.	—	3 bar	3 bar	5 bar	3 bar	—	5 bar

[1] **The data relate to the ambient temperature T = 20°C.**

Mistakes and omissions excepted, subject to change without notice.

Other designs upon request

Order Fax

Float switches Type 447 - 497

Please copy the order form, complete the list below with the desired dimensions, and then use the copy as order form.

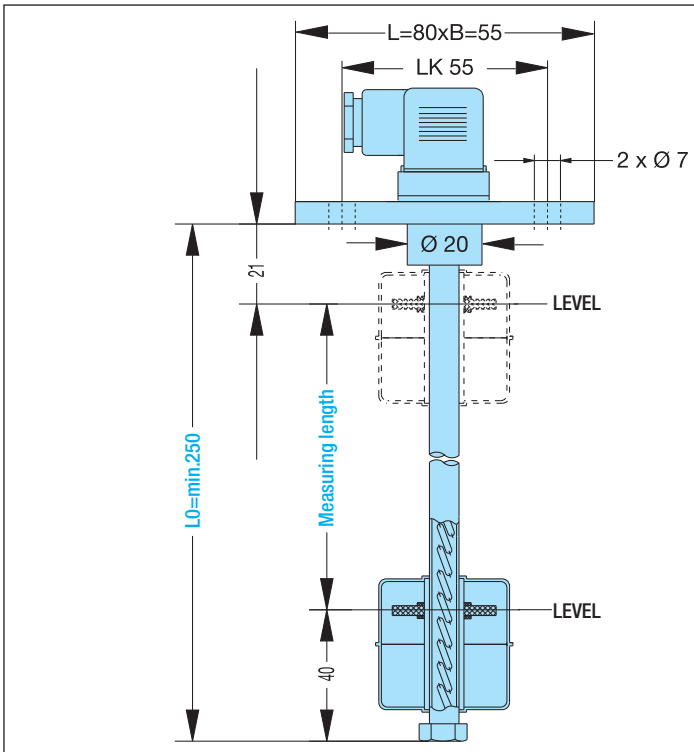

DESIGN
all materials
with cylinder float

The data relates to a medium density = 1

The blue dimensions are variable.
The specified dimensions are standard dimensions.

L_0 = ... mm

Measuring length ..... mm

	Type number
Connecting head/flange	
Float	
Working temperature	°C:
Working pressure	bar:
Medium	
Specific gravity	g/cm³:
Order quantity	Units:
Installation	from the top: ☐ from the bottom: ☐

Date .....

Ordered by .....
Company .....
Street .....
City .....

Signature .....

Mistakes and omissions excepted, subject to change without notice.

Float switches
Type 448 - 498



Product advantages

- simple assembly
- long electrical lifetime due to implementation of dry-reed contacts
- high operating safety due to ventilation duct between slide tube and float
- quasi-continuous measurement over the entire way of the float

Characteristics

- system of protection IP 65
- installation in the cover of the container (from the top) or bottom of the container (from the bottom) possible

	Order ID —	448.001.☐	458.001.☐	468.001.☐	478.001.☐	488.001.☐	498.001.☐
Contact grid 5 mm		05	05	05	05	05	05
Contact grid 10 mm		10	10	10	10	10	10
Components				**Material**		Only upon reques	
Slide tube	—	PVCHT	PVC	VA	PP	PVDF	MS
Float	—	PVCHT	PVC	VA	PP	PVDF	VA
Flange	—	PVC	PVC	VA	PP	PVDF	MS
Plug acc. to DIN 43650	—	3-pole	3-pole	3-pole + PE	3-pole	3-pole	3-pole + PE
Operational data of the standard model [1]							
Working temp. Cont./temp.	—	80 °C /90 °C	55 °C / 60 °C	90 °C / 90 °C	90 °C / 90 °C	—	90 °C / 90 °C
Max. admis. working pres.	—	3 bar	3 bar	20 bar	3 bar	—	20 bar

[1] **The data relate to the ambient temperature T = 20°C.**

Other designs upon request

Mistakes and omissions excepted, subject to change without notice.

Order Fax

Float switches Type 448 - 498

Standard flanges with plug

Ø74 LK = 60

Standard floats

VA = Cylinder Ø42X42
PTFE/PVCHT/PVC/PA/PP = Cylinder Ø40X40

Other flanges

with connecting box
made of ALUMINIUM or ABS
Only upon request!!

Flanges acc. to DIN 2527

DN 50 PN 16/25	VA 1.4571 / St 37
DN 65 PN 16/25	VA 1.4571 / St 37
DN 80 PN 16/25	VA 1.4571 / St 37
DN 100 PN 16/25	VA 1.4571 / St 37
DN 125 PN 16/25	VA 1.4571 / St 37
DN 150 PN 16/25	VA 1.4571 / St 37

We also manufacture plastic flanges according to your wishes.

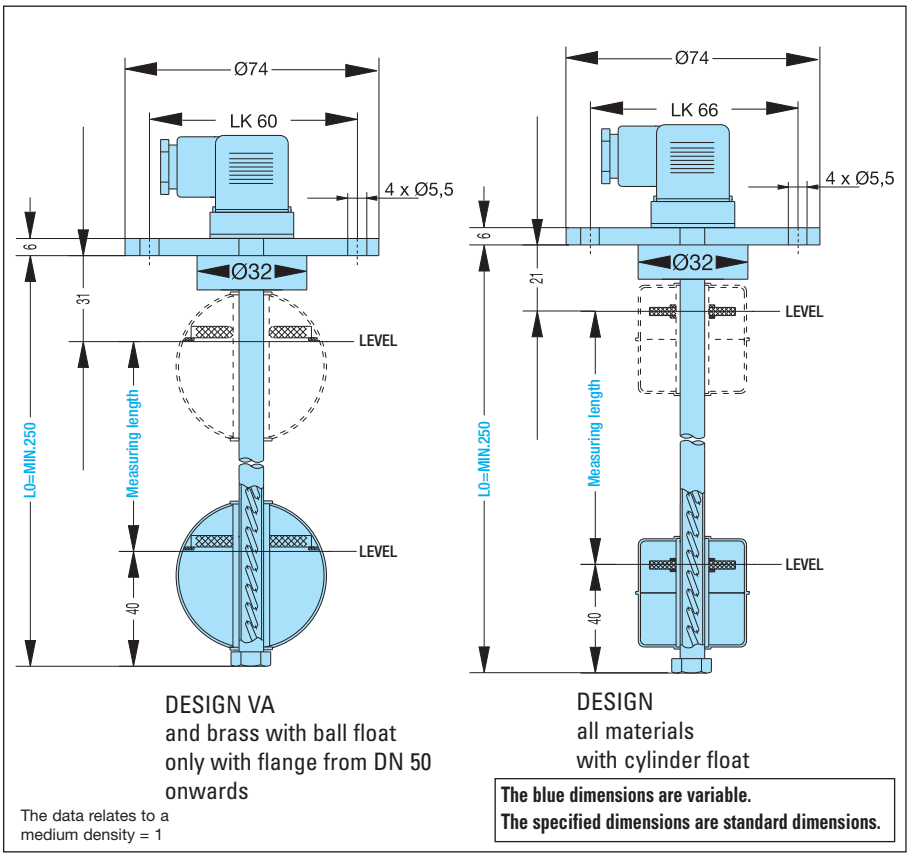

DESIGN VA
and brass with ball float
only with flange from DN 50 onwards

DESIGN
all materials
with cylinder float

The data relates to a medium density = 1

The blue dimensions are variable.
The specified dimensions are standard dimensions.

L_0 = ... mm

Measuring length ..... mm

Please copy the order form, complete the list below with the desired dimensions, and then use the copy as order form.

		Type number
Connecting head/flange		
Float		
Working temperature		°C:
Working pressure		bar:
Medium		
Specific gravity		g/cm³:
Order quantity		Units:
Installation	from the top: ☐	from the bottom: ☐

Date .....

Ordered by .....
Company .....
Street .....
City .....

Signature .....

Mistakes and omissions excepted, subject to change without notice.

Jacob elektronische Mess- und Regelgeräte GmbH, Düsseldorfer Straße 16, D-71332 Waiblingen Tel.: 07151/56806 60 Fax: 07151/56806 79

Float switches
for media loaded with magnetic suspended matters

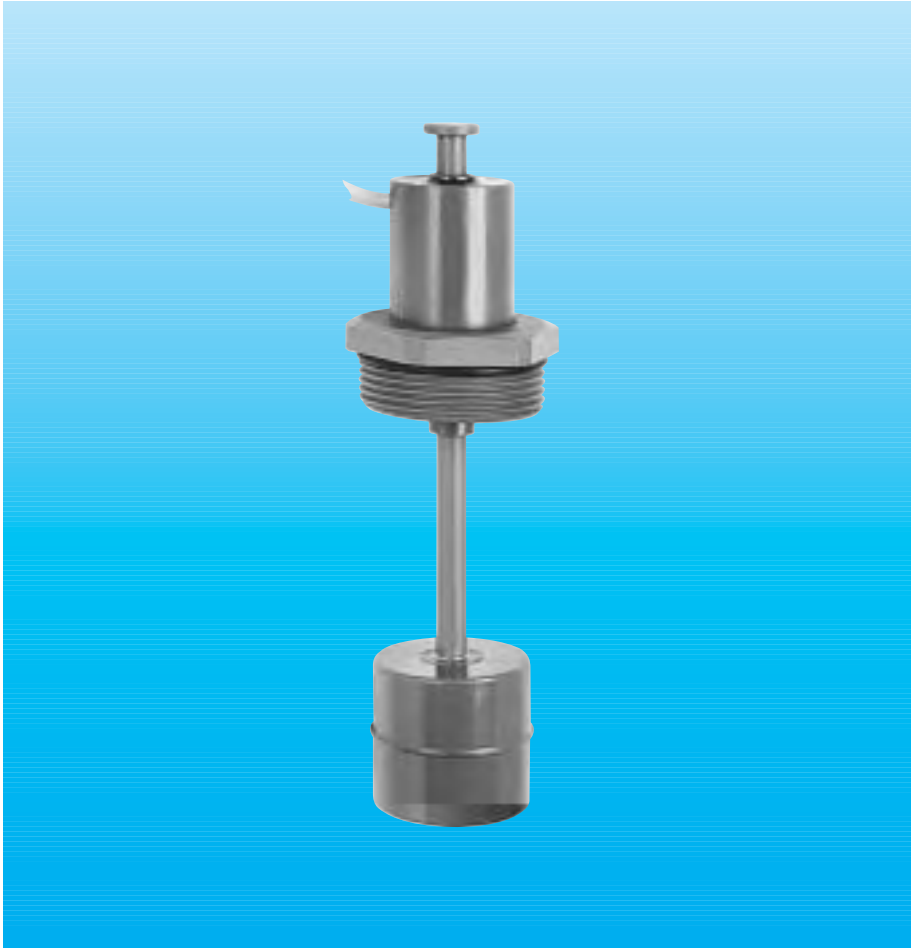

Product advantages
- no adhesion of magnetic particles

Characteristics
- simple assembly
- unpressurized operation

These types of float switches have been designed especially for liquids containing magnetic metal remainders which in case of traditional float switches would solidify at the float magnet and thus block the float in the course of time.
Ideal areas of use are, for example, coolant or lubricant containers at cutting machine tools, machining centres, etc.

Contact function with rising level	**Order ID** 254.00 .51	264.00 .51
Normally open contact	001	001
Normally closed contact	002	002
Change-over contact	003	003
Components	**Material**	
Slide tube	PVC	VA
Protecting tube	PVC	VA
Float	PVC	VA
Screw connection	PVC	VA
Operational data of the standard model		
Working temp. Cont./temp.	55 °C / 90 °C	55 °C / 90 °C
Max. admis. working pres.	unpressurized	unpressurized
Options	1 or 2 switching points possible/plug	

Switching capacity: 230 V/0,5 A/20 VA

Mistakes and omissions excepted, subject to change without notice.

Order Fax

Float switches for media loaded with magnetic suspended matters

Please copy the order form, complete the list below with the desired dimensions, and then use the copy as order form.

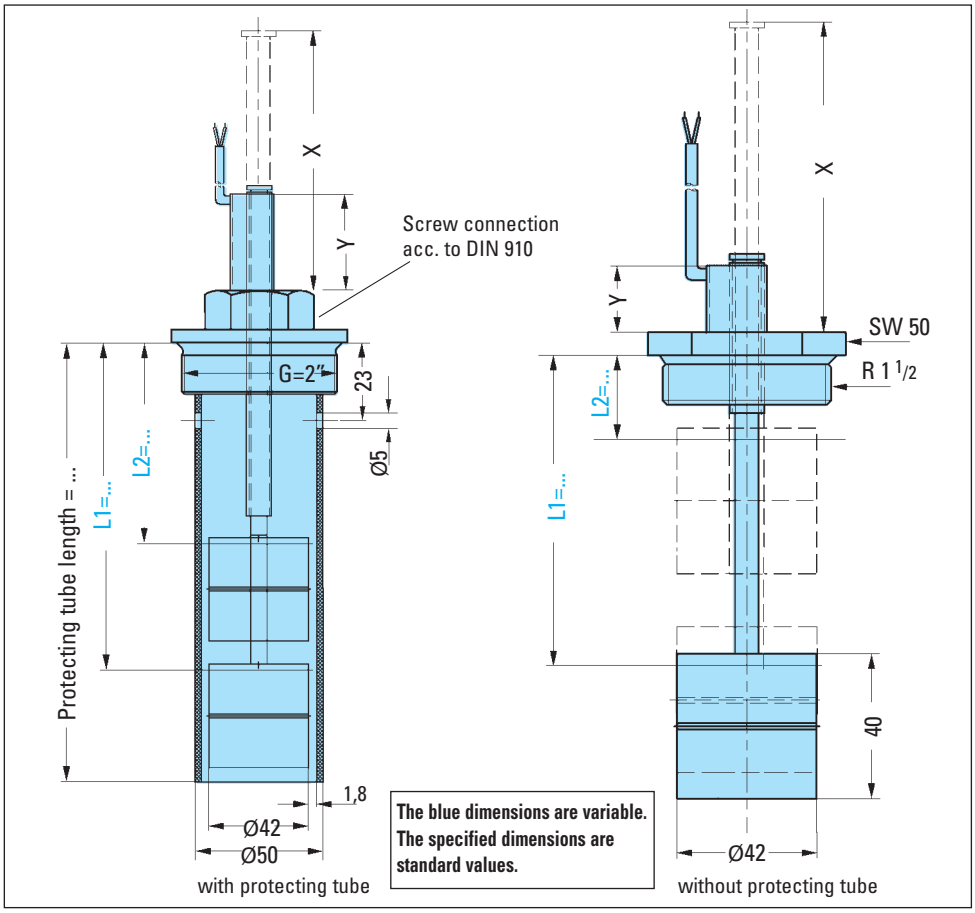

Protecting tube

length = ... **mm**

L_1 = ... **mm**

L_2 = ... **mm**

				Type number
Connecting head/flange				
Float				
Cable silicone/PVC			Length of metres:	
Working temperature			°C:	
Medium/spec. gravity			g/cm³:	
Switching capacity	V:	A:	VA:	
Order quantity			Units:	

Date .....

Ordered by .....

Company .....

Street .....

City .....

Signature .....

Mistakes and omissions excepted, subject to change without notice.

Bypass level float switches



Product advantages

- simple assembly
- long electrical lifetime due to implementation of dry-reed contacts
- high operating safety due to ventilation duct between slide tube, float and side of container

Characteristics

- system of protection IP 65
- lateral installation at the container
- multiple level heights can be monitored with one float
- alternatively normally open/normally closed contact function

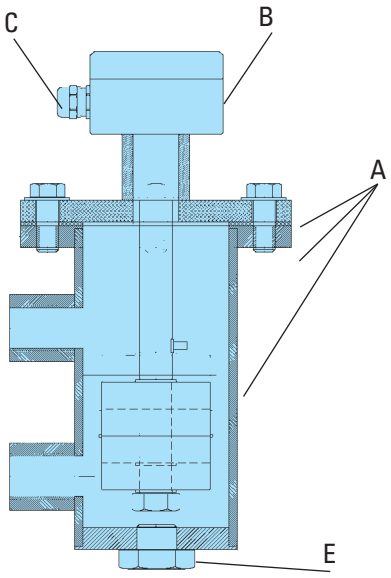

Other lengths (up to 3000 mm) and up to 4 switching points possible, also available with continuous float switch.

	Order ID 600.003.00	606.003.00
	Material	
A-Case bypass	Alu	1.4571
B-Connecting box	Alu	Alu
Components	**Dimensions**	
C-Screw connection	PG 9	PG 9
D-Connection thread	G 3/8"	G 3/8"
E-Vent plug	SW 22	SW 22
Operational data		
Max. working temp.	90 °C	150 °C
Max. working pressure [2)]	20 bar	20 bar
Contact	1 change-over	1 change-over
Switching capacity	230 V /1,0 A / 60 VA	230 V /1,0 A / 60 VA

[2)] Higher pressures upon request

Mistakes and omissions excepted, subject to change without notice.

Order Fax

Bypass level float switches

Please copy the order form, complete the list below with the desired dimensions, and then use the copy as order form.
Reference point for additional switching points is the centre of the lower, lateral connecting branch.

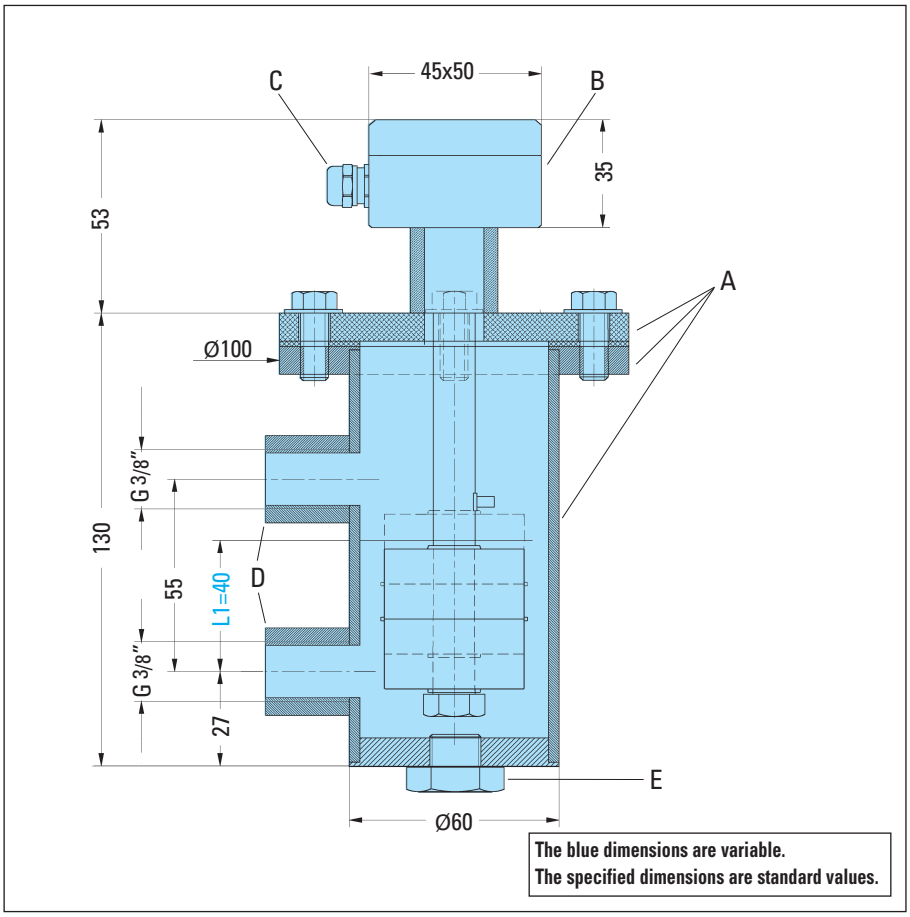

L_1 = ... mm

L_2 = ... mm

L_3 = ... mm

L_4 = ... mm

Data deviating from the standard:

			Type number
Working temperature			°C:
Working pressure			bar:
Switching capacity	V:	A:	VA:
Medium/spec. gravity			g/cm³:
Connection thread			
Distance connection pieces			
Connection flanges (upon request)			
Order quantity			Units:

Date .....

Ordered by .....
Company .....
Street .....
City .....

Signature .....

Mistakes and omissions excepted, subject to change without notice.

Tipped Float Switch

Type 422.001.12 to 428.003.12

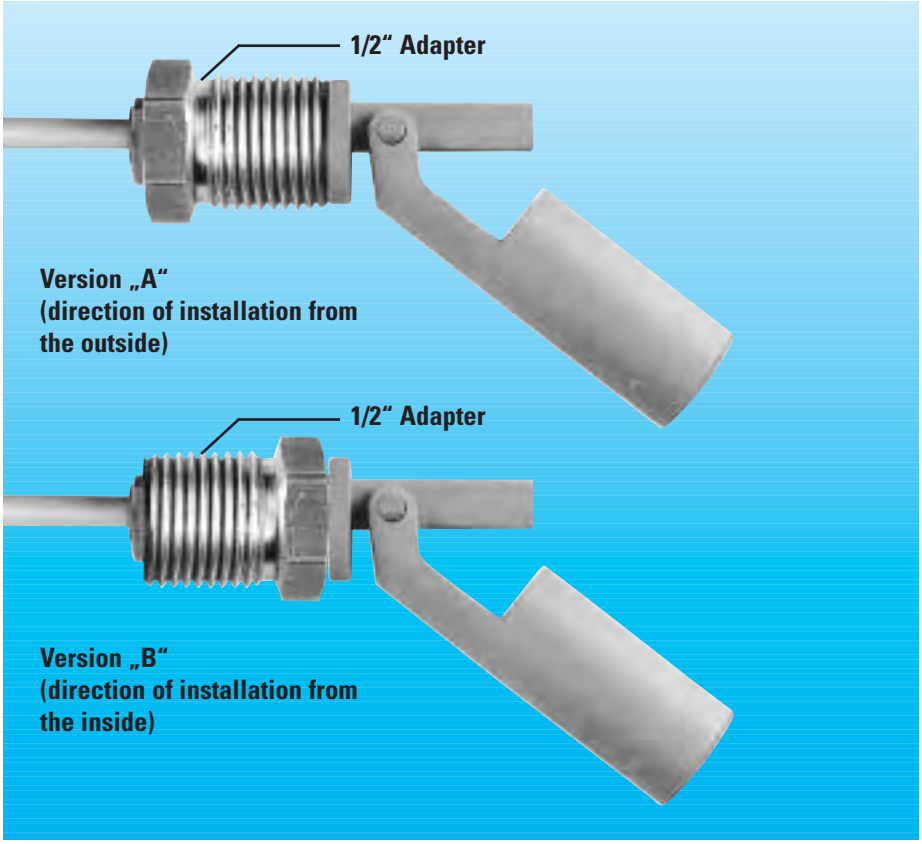

Product advantages

- Easy mounting
- High electric durability through use of dry-reed contacts
- High operational safety
- Small measures
- Maintenance-free

Characteristics

- Enclosure IP 67
- Mounting in the vessel wall (horizontal)
- Optional opening-closing-function or change-over contact

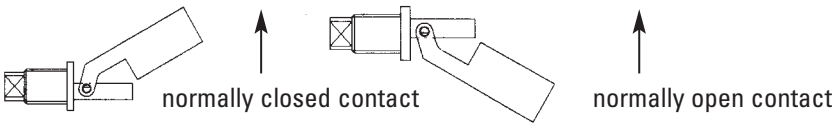

Contact function at rising level	Order ID 422.00 .12	427.00 .12	428.00 .12
Normally open/closed contact	001	001	001
Changer	003	003	003
Components	**Material**		
Housing	PA	PP	PVDF
Float	PA	PP	PVDF
Operating data of the standard type [1)]			
Working temp. / PVC cable	70 °C	70 °C	70 °C
Working temp. / silicone cable*	90 °C	90 °C	90 °C
Max. operating pressure allowed	3 bar	3 bar	3 bar
For mediums from a density of	0,7	0,7	0,8

* Other operating temperature upon request

[1)] **The data relate to the ambient temperature T = 20°C.**

1/2“ Adapter available in: Brass; PA; PP; PVDF

Delivery on demand:
Locknut: Brass; PA; PP; PVDF
Flat seal: PA; PTFE; Vulcanised fibre; Chloroprene rubber

Switching behaviour All functions are bistable.

Rupturing capacity:

Normally open contact	Normally closed contact	Change-over contact
230 V =/ ~	230 V =/ ~	230 V =/ ~
1,0 A 100 VA		1,0 A 60 VA

Connecting cable: 1 meter PVC-sheathed cable (other cables and lengths on request).

Mistakes and omissions excepted, subject to change without notice.

Order Fax

Tipped Float Switch

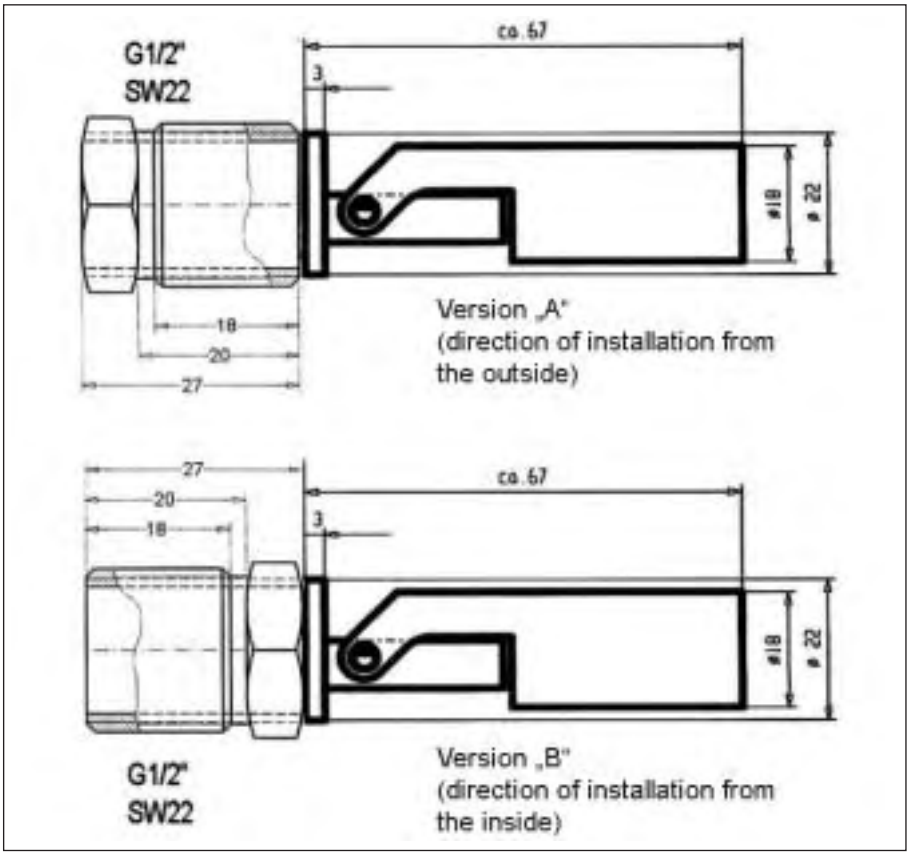

Please copy the original and use the copy as an order form.

Tipped Float Switch	**Type number**
Length of cable	metre:
Order quantity	Units:

Date .....

Ordered by .....
Company .....
Street .....
City .....

Signature .....

Mistakes and omissions excepted, subject to change without notice.

Tipped Float Switch

Type 422.001.16 to 428.003.16

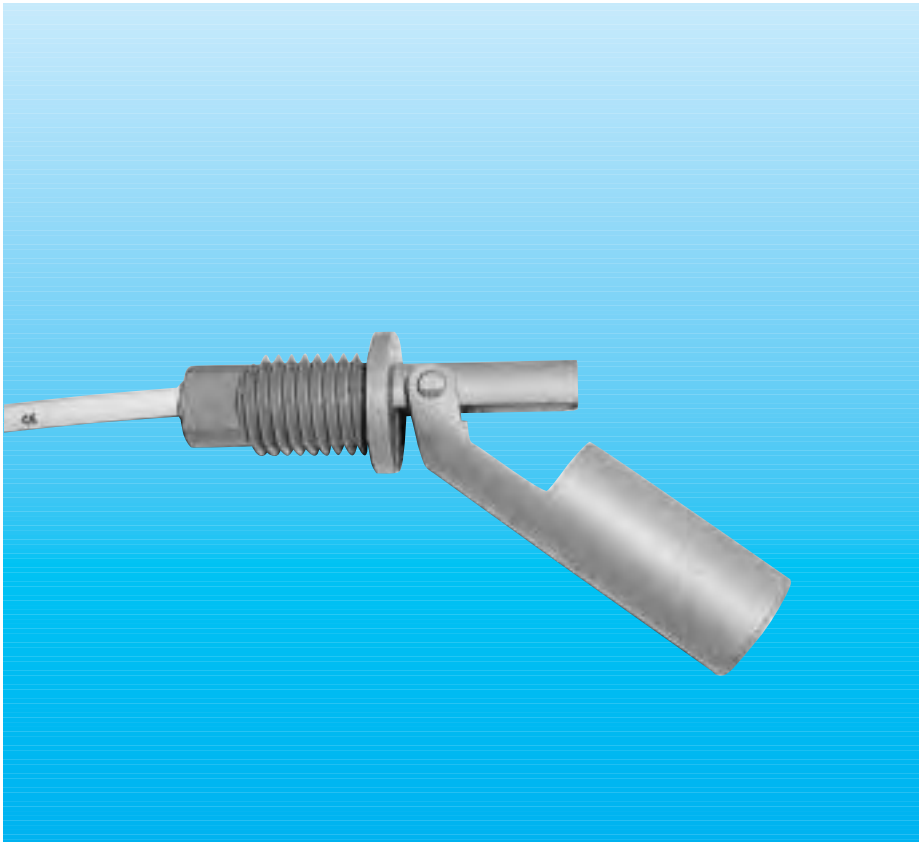

Product advantages

- Easy mounting
- High electric durability through use of dry-reed contacts
- High operational safety
- Small measures
- Maintenance-free

Characteristics

- Enclosure IP 67
- Mounting in the vessel wall (horizontal)
- Optional opening-closing-function or change-over contact

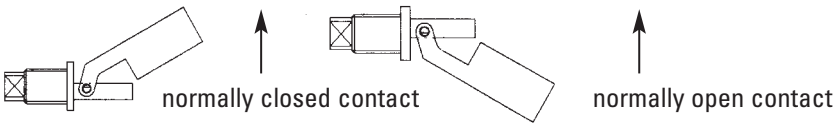

Contact functions at rising level	Order No. 422.00 .16	427.00 .16	428.00 .16
Normally open/closed contact	001	001	001
Changer	003	003	003
Components	**Material**		
Housing	PA	PP	PVDF
Float	PA	PP	PVDF
Operating data of the standard type [1)]			
Working temp. / PVC cable	70 °C	70 °C	70 °C
Working temp. / silicone cable*	90 °C	90 °C	90 °C
Max. operating pressure allowed	3 bar	3 bar	3 bar
For mediums from a density of	0,7	0,7	0,8

[1)] The data relate to the ambient temperature T = 20°C.

Rupturing capacity: Normally open contact/ Normally closed contact 230 V =/ ~ 1,0 A 100 VA

Change-over contact 230 V =/ ~ 1,0 A 60 VA

Switching behaviour All functions are bistable.

Connecting cable: 1 metre PVC-sheathed cable (other cables and lengths on request).

Included in package: 1 piece counter nut M 16, 1 piece flat seal

Mistakes and omissions excepted, subject to change without notice.

Order Fax

Tipped Float Switch

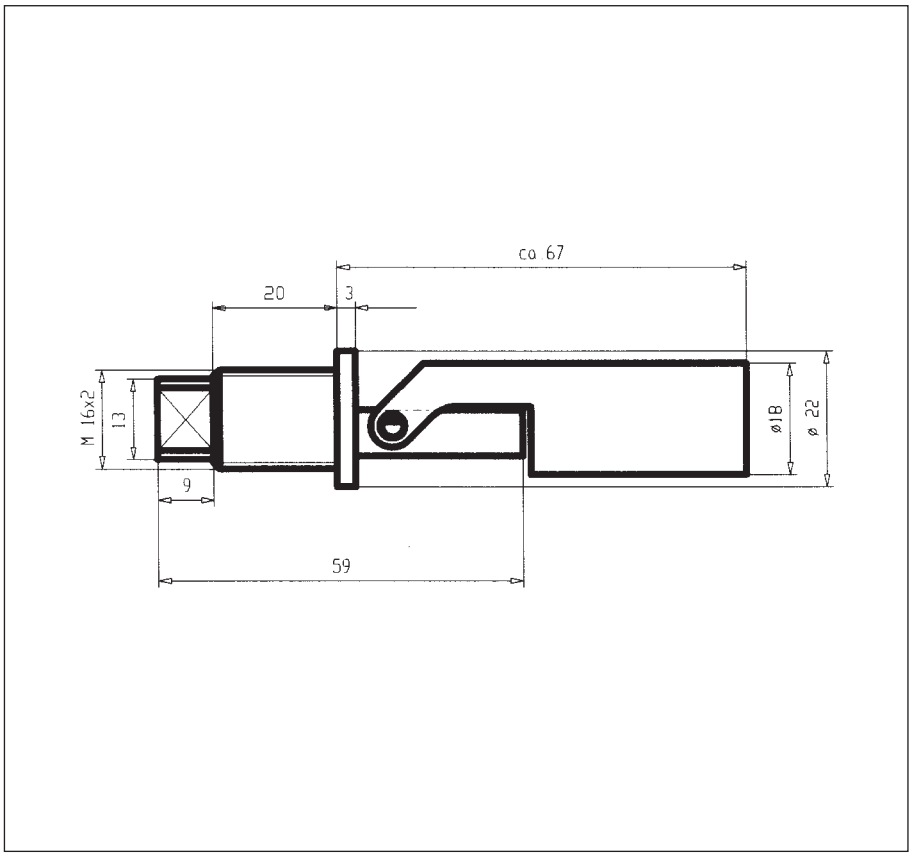

Please copy the original and use the copy as an order form.

Tipped Float Switch	**Type number**
Length of cable	metre:
Order quantity	Units:

Date .....

Ordered by .....
Company .....
Street .....
City .....

Signature .....

Mistakes and omissions excepted, subject to change without notice.

Measuring System RWN

for level measurement RWN-1000-00 to RWN-3000-02

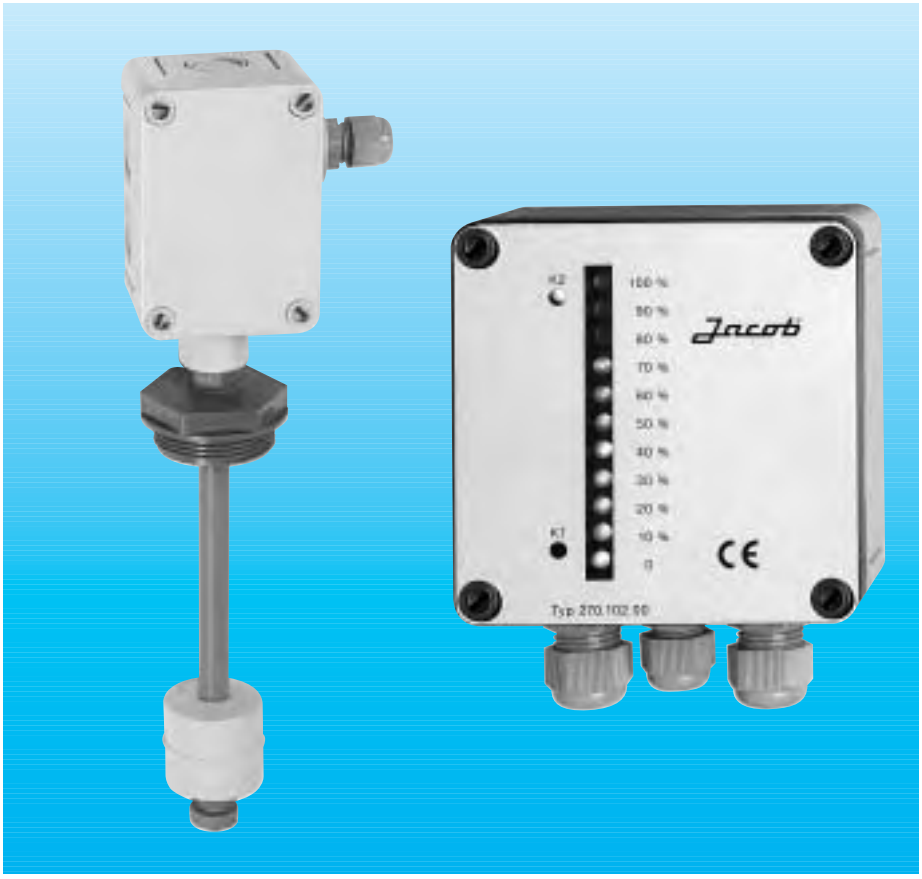

The **RWN** system consists of a float switch Type 254.10 x 1.00 with 10 switching points and an indicating device type 270.100.00 or type 270.102.00 and is especially suitable for level monitoring in rainwater cisterns and fuel tanks. The level is measured in steps of 10% and is clearly indicated by LEDs. The system is available for tanks up to a heigth or 3000 mm (RWN-3000…). The sending device may also be delivered to be non-linear.
In addition the indicating device type 270.102.00 is supplied with to adjustable limit relay's.
The minimum relay has an optional switch point adjustable from 10% to 50% and the maximum relay from 60% to 100%. An LED indicates the respective switching condition.

Indicating Device	**Order No.** **270.100.00**	**270.102.00**
Type of housing	Top mounting IP 66	
Size of housing length/width/height	110 x 110 x 86	
Operating temperature	max. 70 °C	
Power supply	230 V AC	
Indicator	0 – 100% in steps of 10%	
Input Voltage	24 VAC	
Relay outputs	None	2
Rupturing capacity		230 V 6,0 A 1100 VA

Float Switch	**Order No.** **254.10x1.00**
Optional length	available from 1000 mm – 3000 mm
Material	PVC

RWN-System complete	**Order No.**	**mit 270.100.00**	**270.102.00**
Standard size	RWN-1000-00	x	
	RWN-1000-02		x
	RWN-1500-00	x	
	RWN-1500-02		x
	RWN-2000-00	x	
	RWN-2000-02		x
	RWN-2500-00	x	
	RWN-2500-02		x
	RWN-3000-00	x	
	RWN-3000-02		x

Housing data:
The box is made of shock-resistant and flame-resistant polystyrene, light grey RAL 7035. Burning behaviour according to UL 94 = V 2. Long-term temperature resistance 70°C.
The lid is made of shock-resistant and flame-resistant polycarbonate, transparent (like smoky glass). Burning behaviour according to UL 94 = V 2. Long-term temperature resistance 115°C.
UV resistance is sufficient even for use in tropical environments.

Other designs on request.

Switching behaviour: All functions bistable

Mistakes and omissions excepted, subject to change without notice.

Order Fax

Measuring system RWN
For continuous level measurement

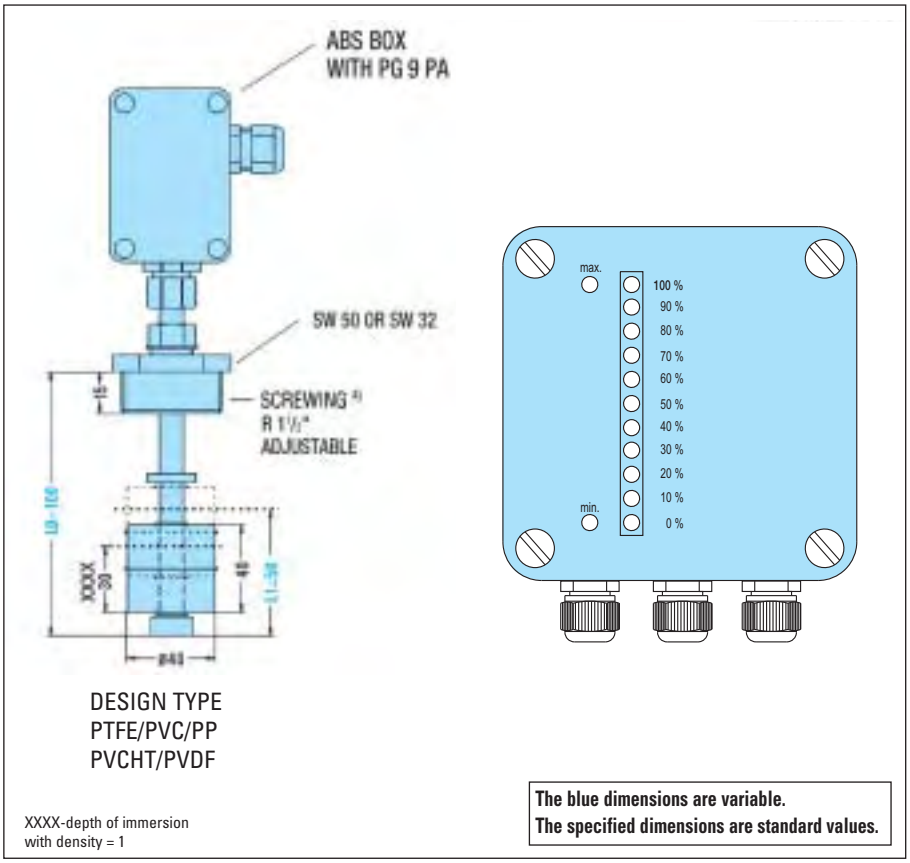

DESIGN TYPE
PTFE/PVC/PP
PVCHT/PVDF

XXXX-depth of immersion
with density = 1

The blue dimensions are variable.
The specified dimensions are standard values.

Please copy the original and use the copy as an order form.

For non-linear type:

L_1 = ... mm
L_2 = ... mm
L_3 = ... mm
L_4 = ... mm
L_5 = ... mm
L_6 = ... mm
L_7 = ... mm
L_8 = ... mm
L_9 = ... mm
L_{10} = ... mm

Measurements from the lower edge of the float switch.

Complete RWN system	**Type number**	
Order quantity	Units:	

Float switch – separately	**Type number**	
Order quantity	Units:	
Required length	L_0=	mm

Indicating device – separately	**Type number**
Order quantity	Units:

Date .....

Ordered by .....
Company .....
Street .....
City .....

Signature .....

Mistakes and omissions excepted, subject to change without notice.

Jacob elektronische Mess- und Regelgeräte GmbH, Düsseldorfer Straße 16, D-71332 Waiblingen Tel.: 07151/56806 60 Fax: 07151/56806 79

Suction lances

Product advantages

- multi-purpose application

Characteristics

- only customer specific manufacturing, i. e. high flexibility with respect to type and design.

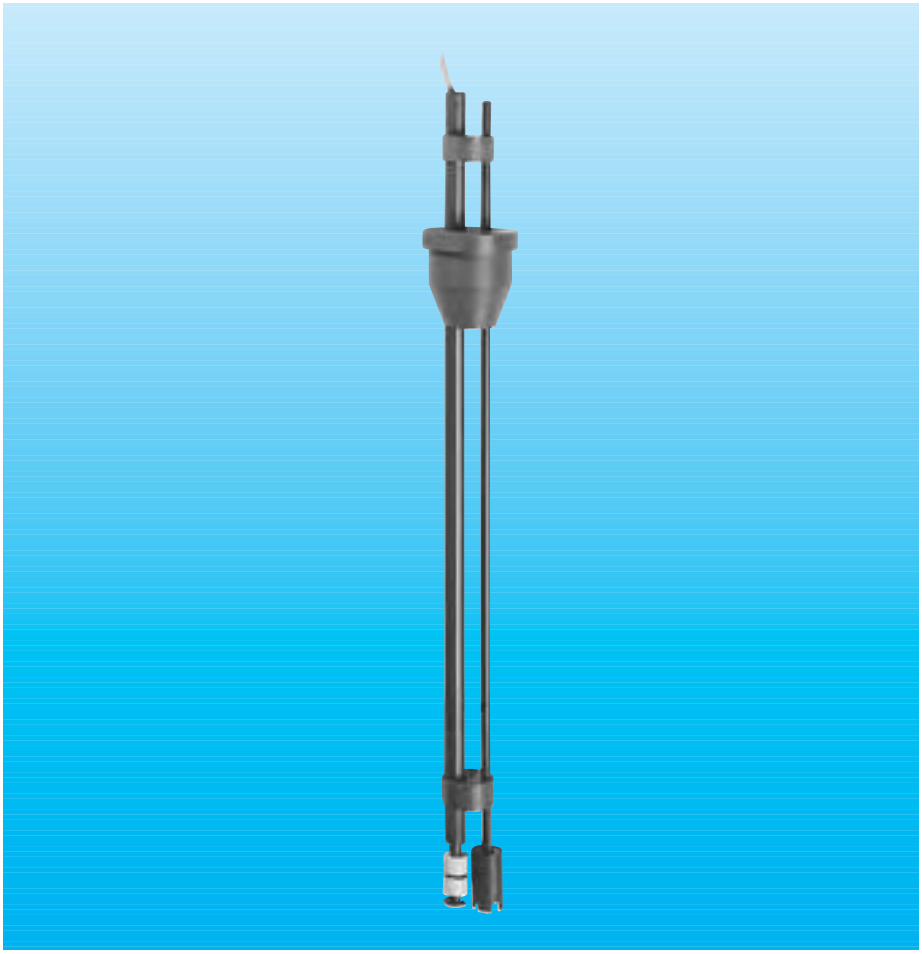

Length and diameter of the suction pipe and the conducting tube can be manufactured according to your wishes.
The check valve is not absolutely necessary, different materials and designs are possible. We manufacture suction lances using different materials and in the most different designs.

	Order ID 750.00 □ .06
Normally open contact	0 0 1
Normally closed contact	0 0 2
Change-over contact	0 0 3
Components	**Material**
Slide tube	PVC
Protecting tube	PVC
Float	PP
Screw connection	PVC
Switching capacity	up to 230 V / 2 A / 100 VA

Mistakes and omissions excepted, subject to change without notice.

Order Fax

Fuction lances

Please copy the order form, complete the list below with the desired dimensions, and then use the copy as order form.

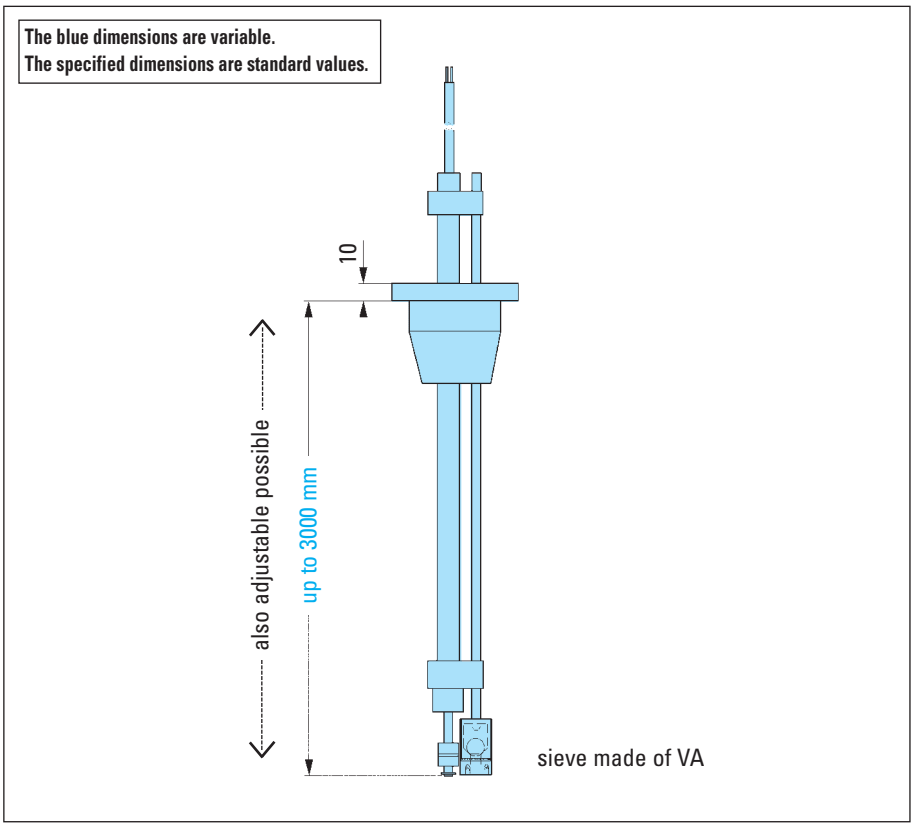

L_0 = ... mm

L_1 = ... mm

				Type number
Connecting head/flange				
Float				
Cable silicone/PVC			Length in metres:	
Working temperature				°C:
Working pressure				bar:
Medium/spec. gravity				g/cm³:
Switching capacity	V:		A:	VA:
Order quantity				Units:

Date .....

Ordered by .....

Company .....

Street .....

City .....

Signature .....

Mistakes and omissions excepted, subject to change without notice.

Floats

for float switches Type 320.001.00 to Type 398.003.00

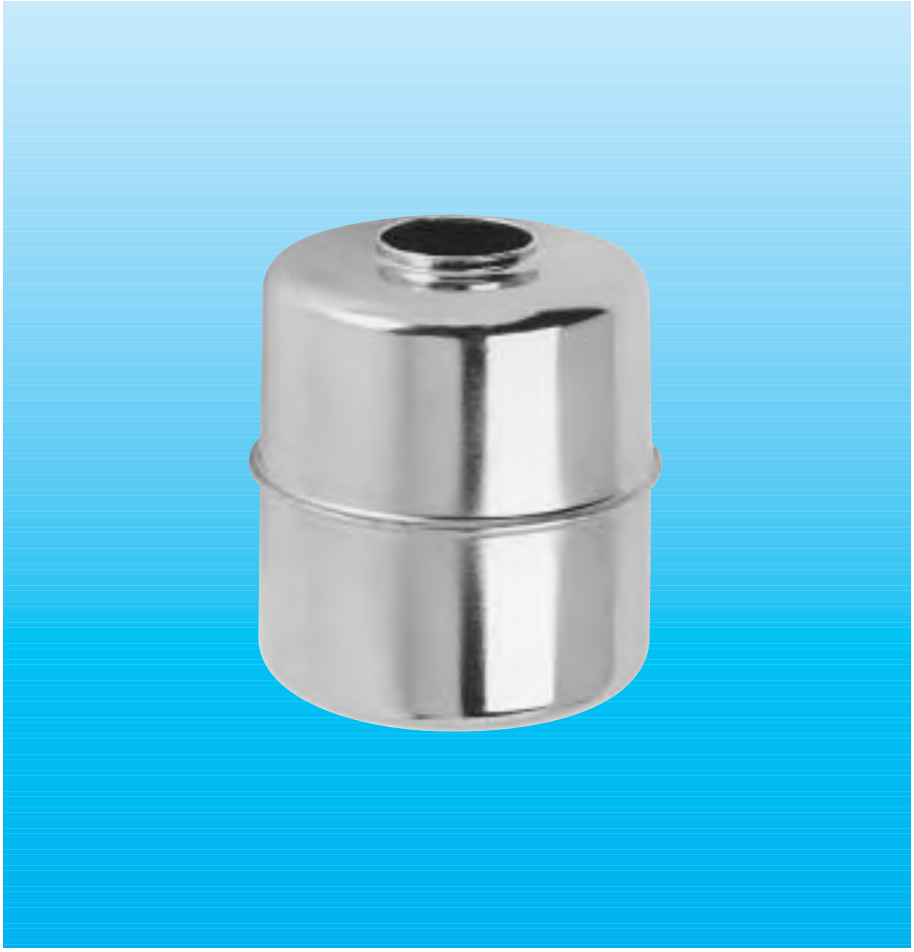

In contrast to the standard, these floats can be mounted on all float switches with slide tube Ø8 mm. This may be required if the pressure or the medium density do not allow the implementation of the standard float.
In case of special steel floats a working temperature exceeding 160 °C ist not recommended – also in combination with special steel or brass slide tube – because the float magnets feature a strong decrease of performance from this temperature onwards. This circumstance may lead to a faulty switching or total loss of power of the float switch because also the switching contacts in the slide tube would change their characteristics, and the complicated interaction between the excitation of response of the contacts and the field strength of the float magnet would be sensitively disturbed.

	Order ID 350.410	350.411	350.412	350.413	350.414	350.415	350.416	350.417
Form	Cylinder	Cylinder	Cylinder	Cylinder	Cylinder	Cylinder	Cylinder	Cylinder
ØA x ØI x H	25 x 9 x 20	25 x 10 x 20	30 x 10 x 20	27 x 10 x 30	19 x 10 x 22	17,5 x 10 x 25	25 x 10 x 20	22 x 9 x 45
Material	PVCHT	PA	PP	PVDF	NBR	NBR	PP	PP
Working pressure	depressurized	3 bar	3 bar	3 bar	10 bar	10 bar	3 bar	3 bar
Temp. max.	90 °C	90 °C	90 °C	100 °C	100 °C	100 °C	110 °C	110 °C
for medium with density >	0,9 g/cm³	0,8 g/cm³	0,7 g/cm³	0,9 g/cm³	0,65 g/cm³	0,75 g/cm³	0,9 g/cm³	0,8 g/cm³

	Order ID 350.418	350.419	350.420	350.421	360.430	360.431	360.432
Form	Cylinder	Cylinder	Cylinder	Cylinder	Ball	Cylinder	Ball
ØA x ØI x H	25 x 10 x 10	32 x 10 x 8	21 x 10 x 15	25 x 9 x 20	30 x 9,5	27 x 10 x 30	44 x 10
Material	PP	NBR	NBR	PP foamed	VA	VA	VA
Working pressure	3 bar	10 bar	10 bar	5 bar	15 bar	15 bar	15 bar
Temp. max.	80 °C	100 °C	100 °C	110 °C	160 °C	160 °C	160 °C
for medium with density >	1 g/cm³	0,58 g/cm³	0,72 g/cm³	0,85 g/cm³	0,8 g/cm³	0,8 g/cm³	0,7 g/cm³

Temperature stability of the materials used without mechanical load and unpressurized

ISO symbol	PP	PVC(PVCHT)	PA 6	NBR
Name	Polypropylene	Polyvinyl choride	Polyamide 6	Nitrite rubber
Application temp. Min./max./temp.	0 °C /+110 °C /+140 °C	-20 °C /+60(90) °C /+70(90) °C	-40 °C /+80 °C /+140 °C	-20 °C /+140 °C /+150 °C

Mistakes and omissions excepted, subject to change without notice.

Order Fax

Floats for float switches
Type 320.001.00 to type 398.003.00

Please copy the original and use the copy as an order from.

	Type number
Order quantity	Units:

Date .....

Ordered by .....
Company .....
Street .....
City .....

Signature .....

Mistakes and omissions excepted, subject to change without notice.

Jacob elektronische Mess- und Regelgeräte GmbH, Düsseldorfer Straße 16, D-71332 Waiblingen Tel.: 07151/568060 Fax: 07151/568079

Floats

for float switches Type 230.001.00 to Type 298.003.00



In contrast to the standard, these floats can be mounted on all float switches with slide tube Ø 12 mm. This may be required if the pressure or the medium density do not allow the implementation of the standard float.
In case of special steel floats a working temperature exceeding 160 °C is not recommended – also in combination with special steel or brass slide tube – because the float magnets feature a strong decrease of performance from this temperature onwards. This circumstance may lead to a faulty switching or total loss of power of the float switch because also the switching contacts in the slide tube would change their characteristics, and the complicated interaction between the excitation of response of the contacts and the field strength of the float magnet would be sensitively disturbed.
Please request floats for continuous float switches separately.

	Order ID 250.410	250.411	250.412	250.413	250.414	250.415	250.416	260.410
Form	Cylinder	Cylinder	cylinder	cylinder	cylinder	cylinder	cylinder	cylinder
ØA x ØI x H	42 x 14 x 28	42 x 14 x 40	42 x 14 x 28	42 x 14 x 38	42 x 14 x 28	42 x 14 x 38	42 x 14 x 49	42 x 14 x 42
Material	PVCHT	PVCHT	PA	PA	PP	PP	PVDF	VA
Working pressure	3 bar	3 bar	5 bar	5 bar	5 bar	5 bar	6 bar	20 bar
Temp. max.	90 °C	90 °C	90 °C	90 °C	110 °C	110 °C	90 °C	90 °C
for medium with density >	0,9 g/cm³	0,8 g/cm³	0,8 g/cm³	0,7 g/cm³	0,7 g/cm³	0,7 g/cm³	0,85 g/cm³	0,8 g/cm³

	Order ID 260.411	260.412	260.413	260.415	260.416	260.417	280.410	280.411
Form	Ball	Ball	Ball	Ball	Ball	Ball	Cylinder	Cylinder
ØA x ØI x H	52 x 14	62 x 14	82 x 14	62 x 22,5	82 x 22,5	105 x 22,5	53 x 13 x 75	40 x 14 x 20
Material	VA	VA	VA	VA	VA	VA	PTFE	NBR
Working pressure	30 bar	25 bar	20 bar	20 bar	20 bar	15 bar	3 bar	10 bar
Temp. max.	160 °C	160 °C	160 °C	160 °C	160 °C	160 °C	160 °C	100 °C
for medium with density >	0,7 g/cm³	0,6 g/cm³	0,5 g/cm³	0,65 g/cm³	0,55 g/cm³	0,5 g/cm³	0,9 g/cm³	0,81 g/cm³

Temperature stability of the materials used without mechanical load and unpressurized

ISO-Symbol	PP	PVC(PVCHT)	PA 6	NBR
Name	Polypropylene	Polyvinyl choride	Polyamide 6	Nitrite rubber
Einsatztemp. min./max./Kurzzeit	0 °C /+110 °C /+140 °C	-20 °C /+60(90) °C /+70(90) °C	-40 °C /+80 °C /+140 °C	-20 °C /+140 °C /+150 °C

Mistakes and omissions excepted, subject to change without notice.

Order Fax

Floats for float switches
Type 230.001.00 to type 298.003.00

Please copy the original and use the copy as an order from.

	Type number
Order quantity	Units:

Date .....

Ordered by .....
Company .....
Street .....
City .....

Signature .....

Mistakes and omissions excepted, subject to change without notice.

Jacob elektronische Mess- und Regelgeräte GmbH, Düsseldorfer Straße 16, D-71332 Waiblingen Tel.: 07151/568060 Fax: 07151/568079

Screw connections and flanges
– Overview –

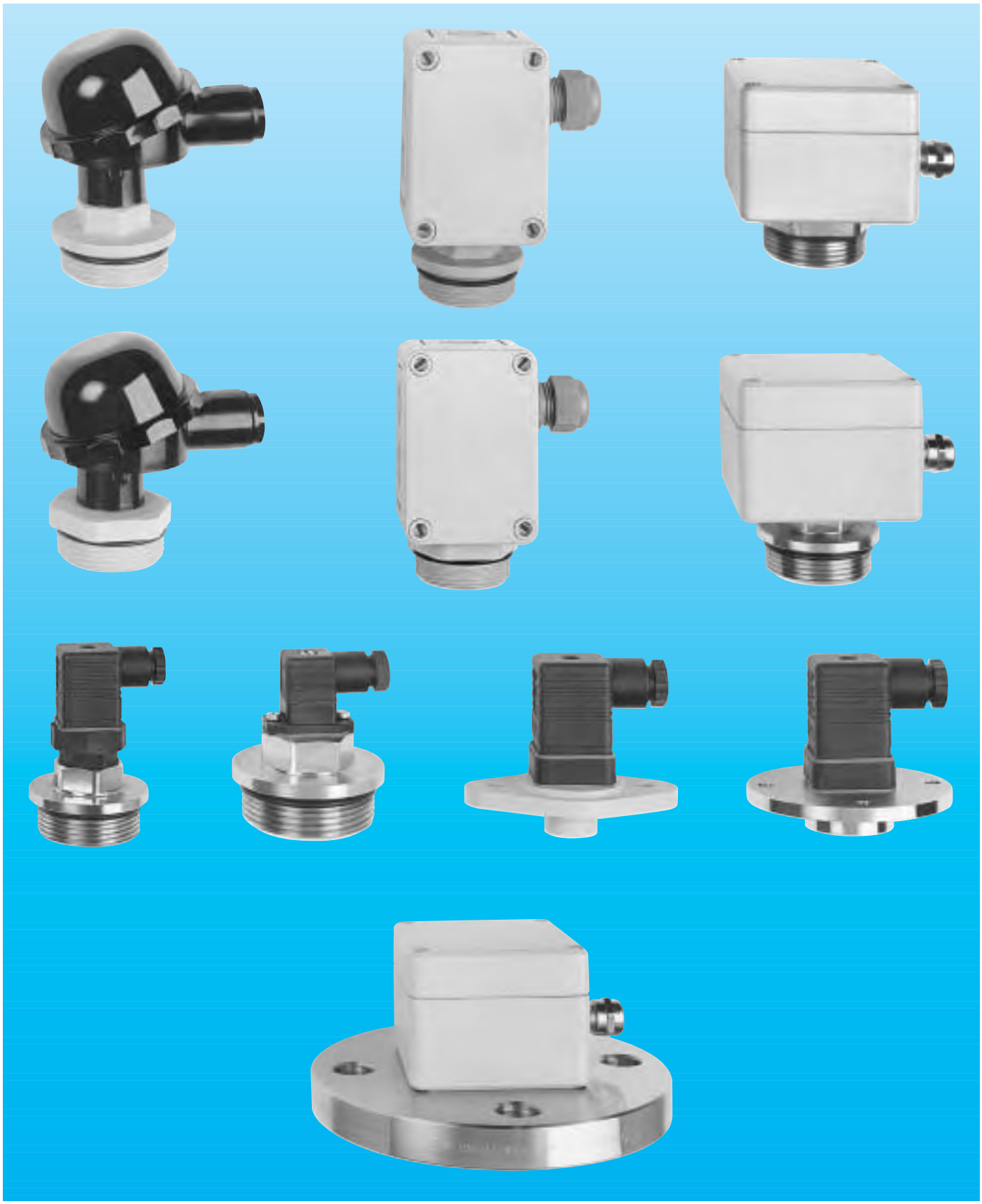

Mistakes and omissions excepted, subject to change without notice.

Indicators

Anzeigegeräte
Appareils indicateurs
Dispositivi di indicazione
Aparatos indicadores



Measuring Transformer

Type 270.400.00 and 270.420.00

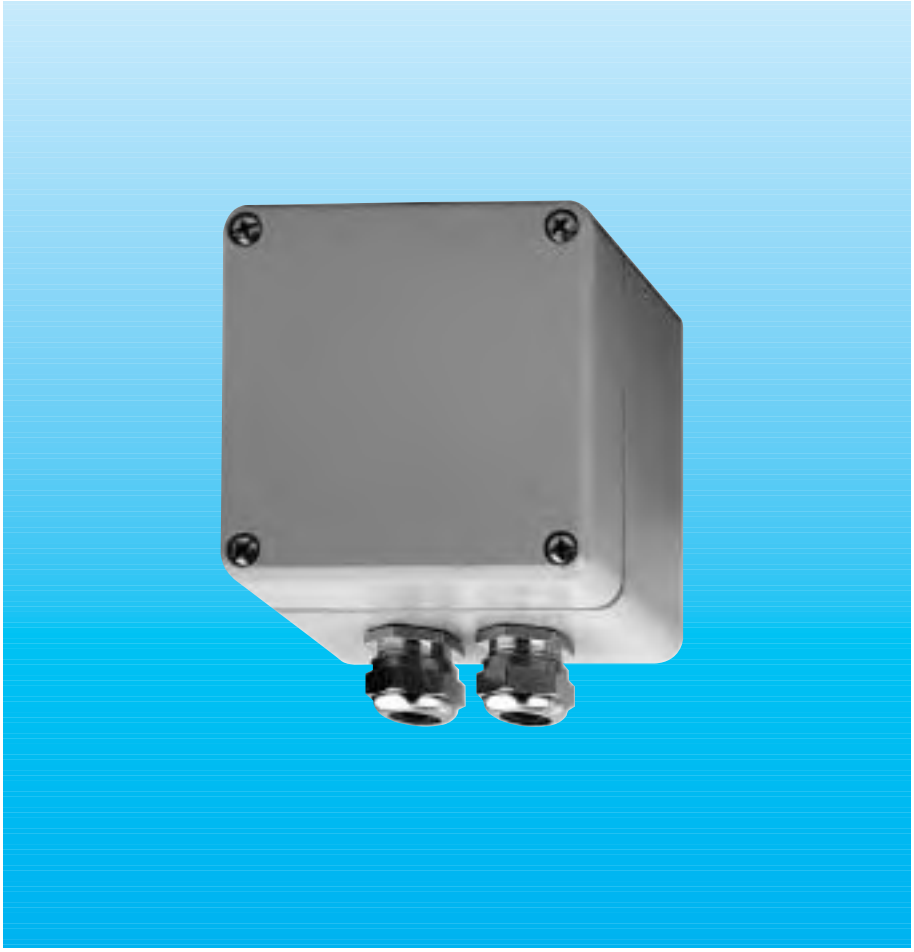

The measuring transformer 270.420.00 has been designed for a constant and filtered operating voltage of 24 V DC. It has been particularly developed for reed resistance chains and provides a linear standard signal of 4…20 mA or 0…20 mA at the output. The exact adjustment of the current signal is performed in the factory.
If the measuring transformer should be maladjusted for any reason, it can be re-adjusted by the customer.
To perform the re-adjustment, the following steps must be performed.

1. The operational level transmitter must be connected.
2. Connect a current meter at the binders X 2, measuring range: mA.
3. If the float of the level transmitter is located at the lower stop, the minimum current of 4 mA is adjusted by means of the potentiometer P1.
4. If the float of the level transmitter is located at the upper stop, the maximum current of 20 mA is adjusted by means of the potentiometer P2. The precise adjustment of the maximum current is performed with potentiometer P3.

Caution:
During the adjustment of the maximum current with P2 the minimum current, which had already been adjusted by means of P1, may change and, thus, may be reversed. Therefore, several adjustment processes may be required. If the current values are exactly adjusted, they do not change any more unless the potentiometers P1, P2, P3 are changed.

	Order ID 270.400.00	270.420.00
Case type	Assembly	
Case dimensions L x W x H	80 x 80 x 65	
Working temp.	-20 °C - +65 °C	
Power supply	24 V	
Analog outputs	0(4) - 20mA	

Mistakes and omissions excepted, subject to change without notice.

Order Fax

Measuring Transformer Type 270.400.00 and 270.420.00

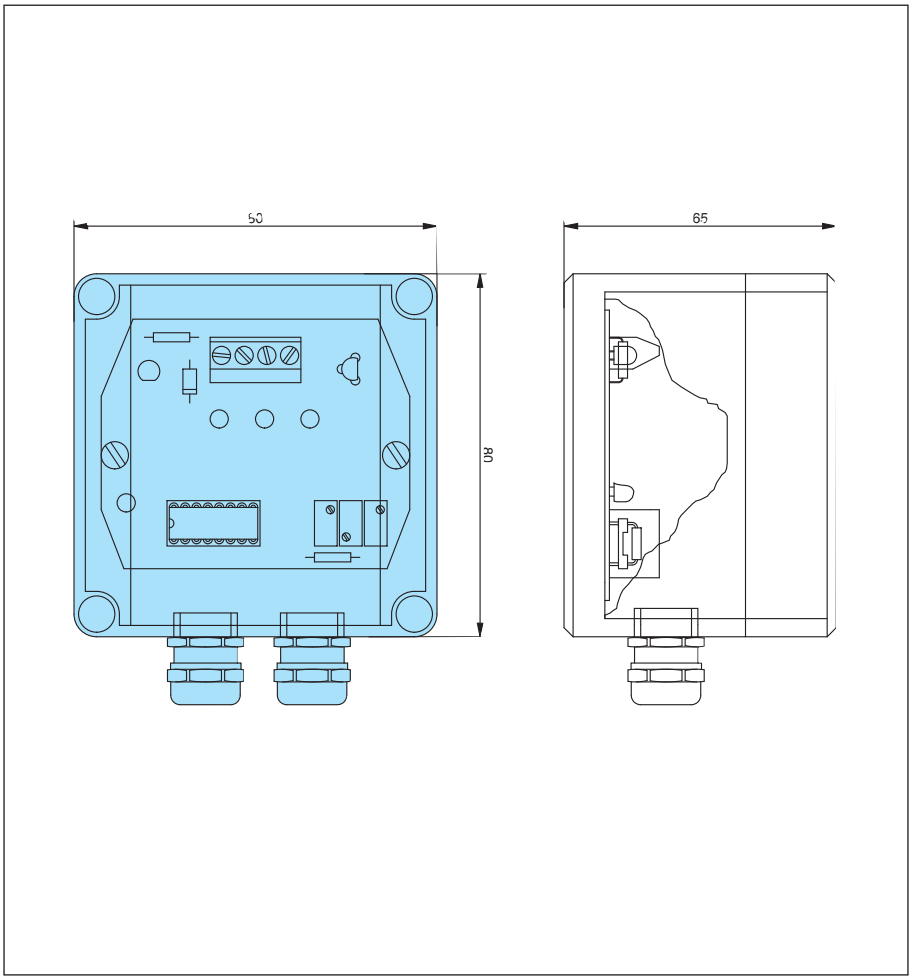

Please copy the order form, complete the list below with the desired dimensions, and then use the copy as order form.

	Type number
Order quantity	Units:

Date .....

Ordered by .....
Company .....
Street .....
City .....

Signature .....

Mistakes and omissions excepted, subject to change without notice.

Switching ampflifier
Type 270.751.00, Type 270.752.00 and Type 270.752.AP



General:
The most important data of reed switches (contacts) are:
a) switching voltage
b) switching current
c) switching capacity
The maximum data are specified by the manufacturer for purely resistive loads. None of these maximum values must be exceeded. Otherwise, the lifetime of the reed contact would substantially decrease, or the contact would be immediately destroyed (see catalogue page 7, Switching capacity of the reed contacts [switching hyperbola]). This means that the switching capacity of thereed contact is limited. Furthermore, reed contacts must be protected against too high currents at make and cutoff currents as well as against spikes with respect to lamps, capacitive and inductive loads.
Short description: If capacities are to be switched which exceed the maximum values of the reed contact, switching amplifiers are used. 2 types of the switching amplifier are available:
Type 270.751.00: Connection of one reed contact, output 1 floating change-over contact,
Type 270.752.00: Connection of two reed contacts, output 2 floating change-over contacts.
In addition, the switching amplifier can be used for the filling or evacuation of a storage basin or container by means of a filling or evacuation pump (1 or 2 containers).
At the same time, the appliance acts as a contact protective relay (control circuit 12 V AC).
Type 270.752.AP: indentical with type 270.752.00, but in case for wall-mounted assembly.

	Order ID 270.752.AP	270.751.00/270.752.00
Case type	Polycarbonate Assembly IP 65	PA IP 40 snap-on on supporting bar
Case dimensions L x W x H	70 x 45 x 117	
Power supply	230 V AC / 24 V AC/DC	230 V AC / 24 V AC/DC
Switching contact	1 x change-over contact 230 V AC/DC 5 A 1100 VA	

270.752.00 and 270.752.AP

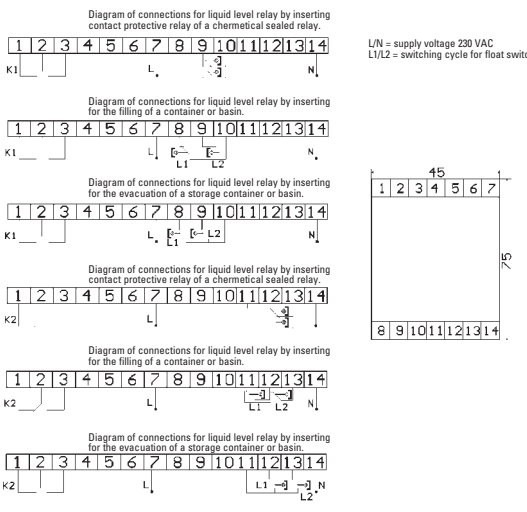

270.751.00

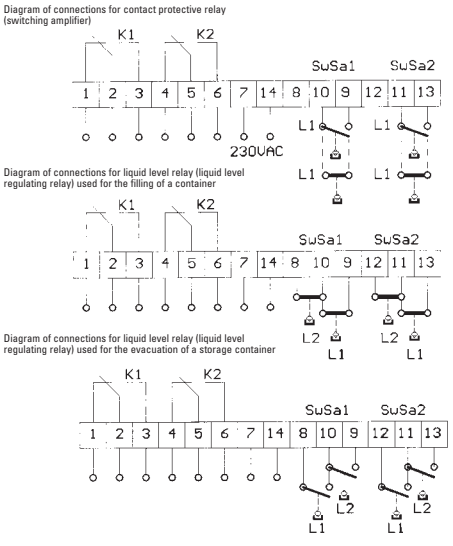

Mistakes and omissions excepted, subject to change without notice.

Order Fax

Switching amplifier
Type 270.751.00 and Type 270.752.00

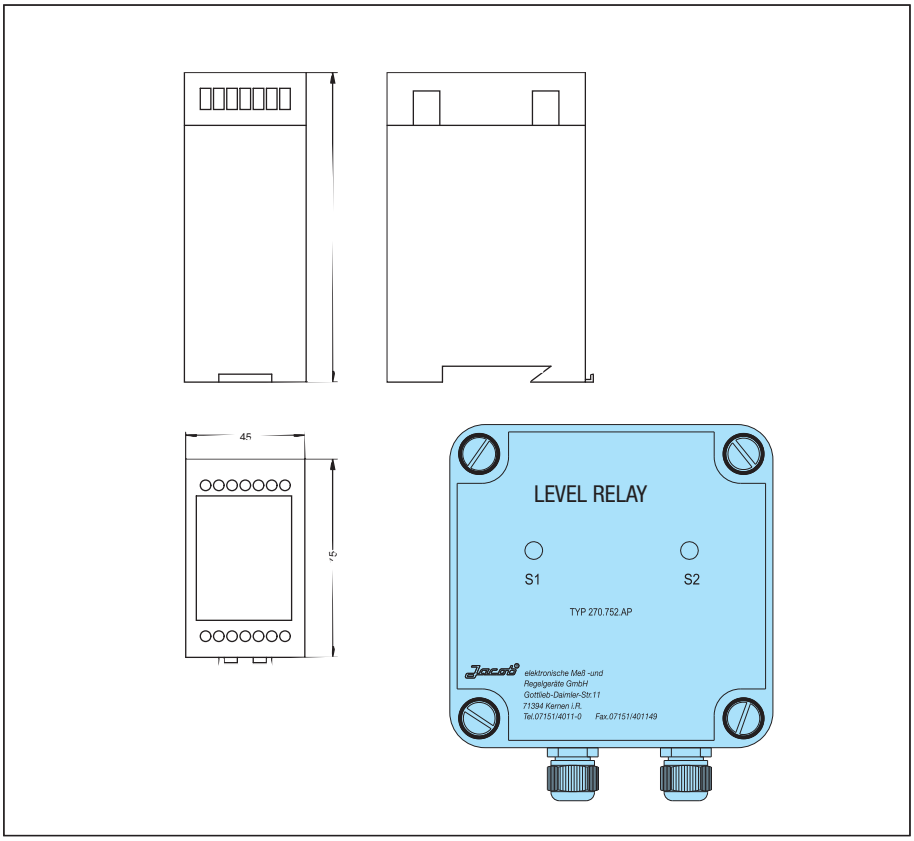

Please copy the order form, complete the list below with the desired dimensions, and then use the copy as order form.

	Type number
Order quantity	Units:

Date .....

Ordered by .....
Company .....
Street .....
City .....

Signature .....

Mistakes and omissions excepted, subject to change without notice.

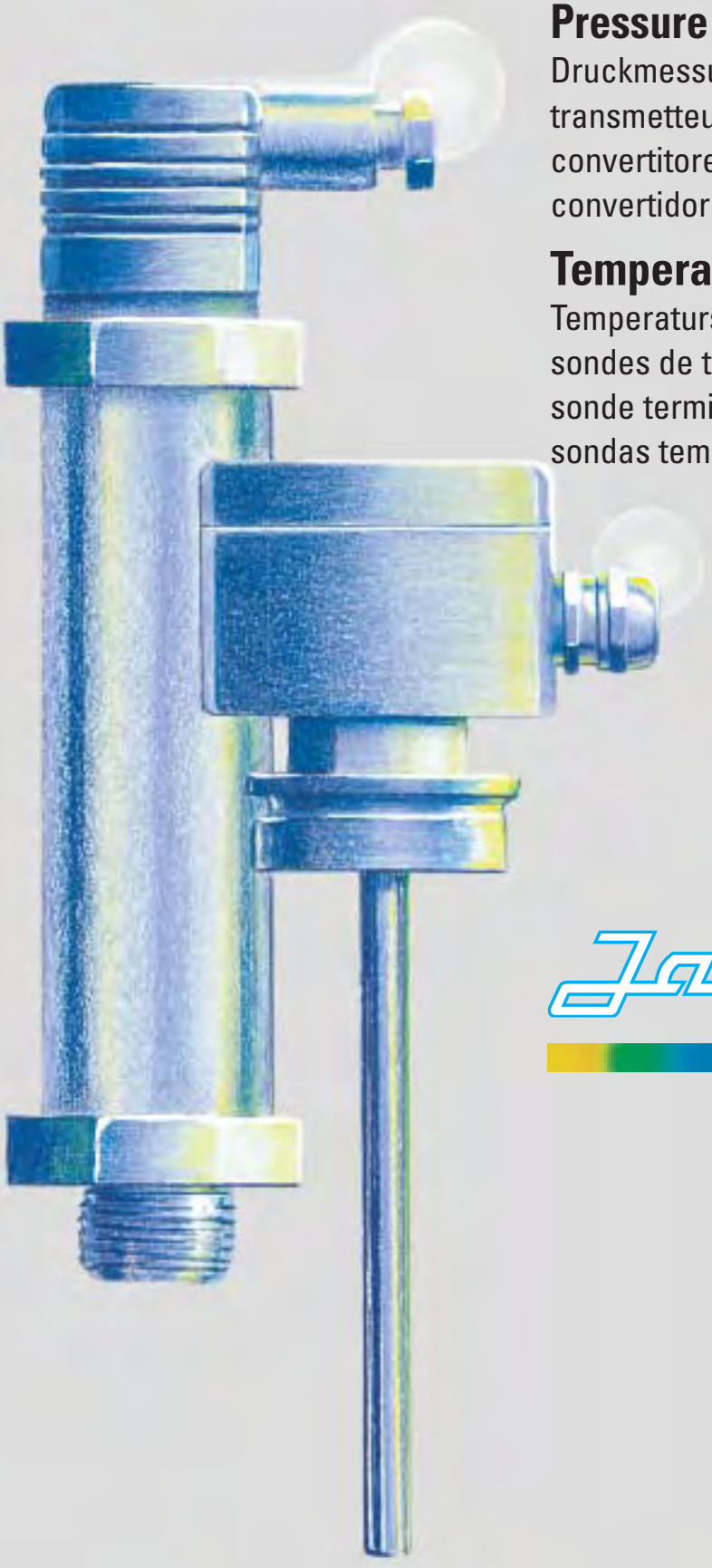

Pressure measuring transducer

Druckmessumformer
transmetteur de pression
convertitore manometrico di misura
convertidor manométrico

Temperature probes

Temperatursonden
sondes de temperature
sonde termiche
sondas temperatura

Jacob®

Temperature probe with PT 100 element

Type 700.100.30 to Type 700.100.90

Also offset versions are available as well as screw connections or flanges from type 1 to type 11.

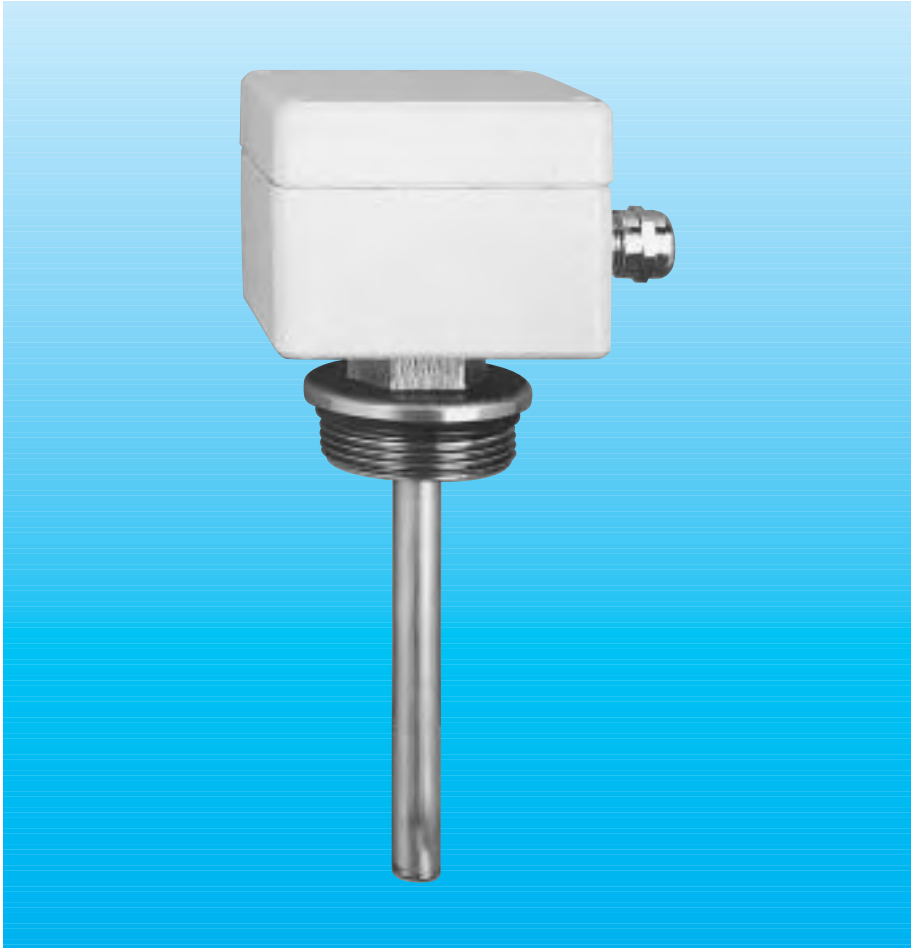

	Order ID 700.100.30	700.100.40	700.100.50	700.100.60	700.100.70	700.100.80	700.100.90
Material probe tube / screw connection	PTFE	PVCHT	PVC	VA	PP	PVDF	MS
Screw connection	R 1 1/2"						
Data transformer	Typ MU 310 Ausgang 4 - 20 mA*						
Case	ALU IP 66 80 mm x 80 mm x 65 mm						

* Only possible with connecting box. Temperature range is linearized according to the wishes of the customer.

Mistakes and omissions excepted, subject to change without notice.

Order Fax

Temperature probe with PT 100 element Type 700.100.30 to Type 700.100.90

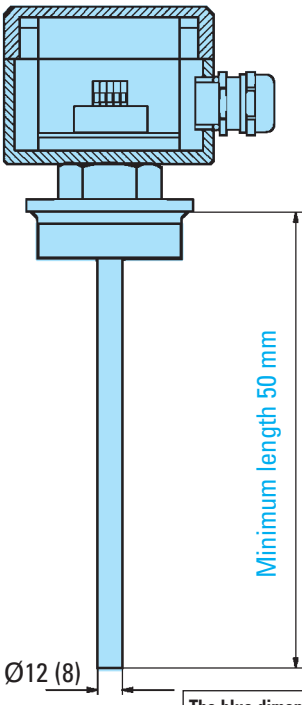

The blue dimensions are variable.
The specified dimensions are standard dimensions.

Please copy the order form, complete the list below with the desired dimensions, and then use the copy as order form.

	Type number
Screw connection material	
Screw connection	R:
Order quantity	Units:
Fitting length	mm:
Tube diameter	☐ 12 mm ☐ 8 mm

Date .....

Ordered by .....
Company .....
Street .....
City .....

Signature .....

Mistakes and omissions excepted, subject to change without notice.

Jacob elektronische Mess- und Regelgeräte GmbH, Düsseldorfer Straße 16, D-71332 Waiblingen Tel.: 07151/56806 60 Fax: 07151/56806 79

Level-indication sensors

Füllstandssonden

Palpeurs de niveau

Sonde di livello

Sondas de estado de relleno



Jacob®

Level electrodes
Type 550.... – 570....

Other designs upon request.
All lengths can be adjusted upon request.

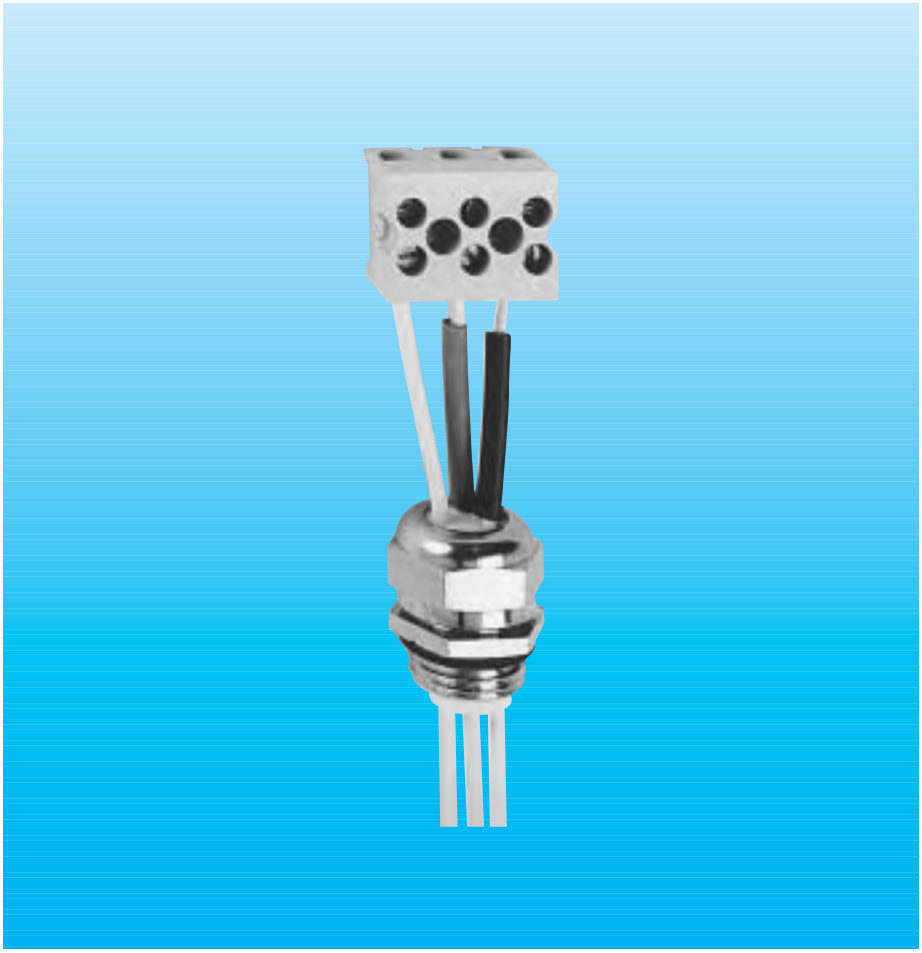

	Order ID 550.011.00	560.011.00	570.011.00	551.011.00	561.011.00	590.111.00
	Material					
Electrode	VA	VA	VA	VA	VA	VA
Insulation	PTFE	PTFE	PTFE	PTFE	PTFE	PTFE
Screw connection	PVC	VA	PP	PVC	VA	MS
Operational data of the standard model						
Working temp. with PVC cable	60 °C	90 °C	90 °C	60 °C	90 °C	
Working temp. with silicone cable		150 °C	110 °C		150 °C	150 °C
[2] max. admis. working pres.	5 bar	5 bar	5 bar	5 bar	5 bar	5 bar

[2] Data relate to the ambient temperature T = 20 °C

Mistakes and omissions excepted, subject to change without notice.

Order Fax

Level electrodes Type 550.... – 570....

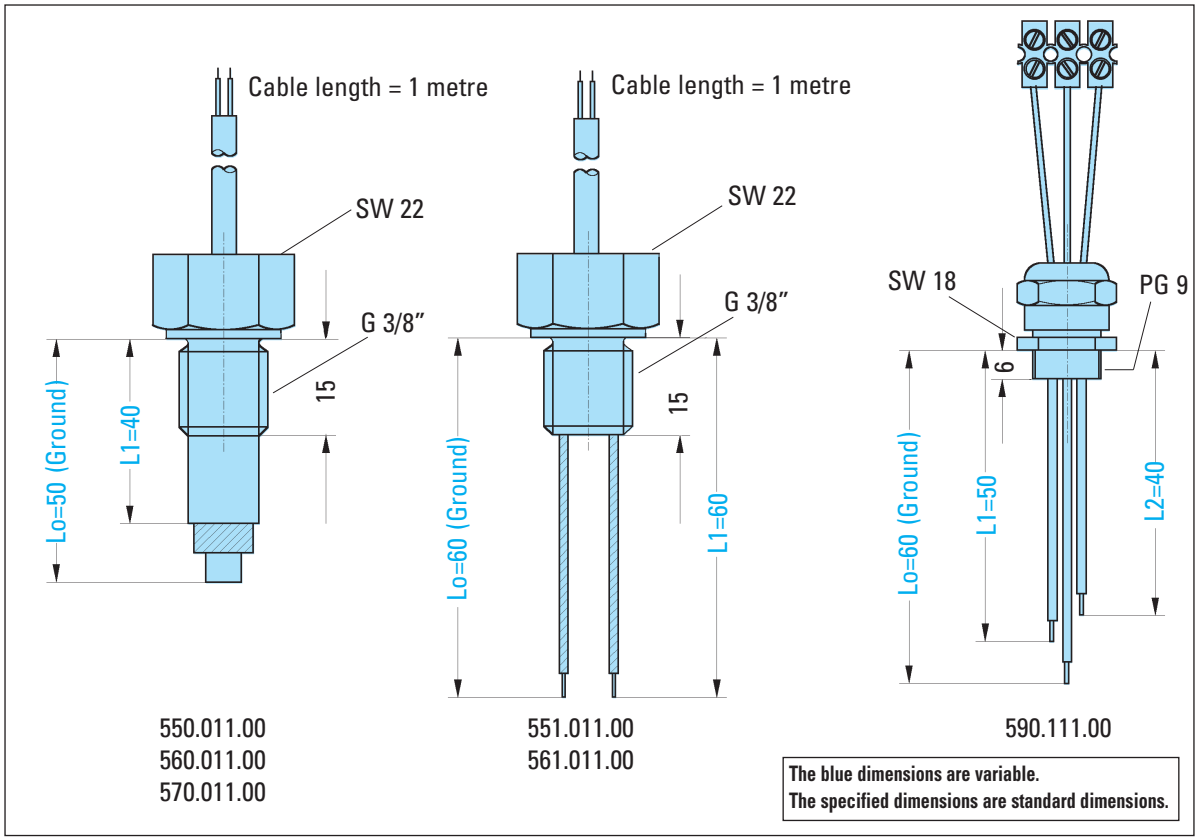

Please copy the order form, complete the list below with the desired dimensions, and then use the copy as order form.

	Type number
Electrode	
Screw connection	
Cable silicone/PVC	Length in metres:
Working temperature	°C:
Working pressure	bar:
Medium	
Order quantity	Units:

L_0 = ... mm

L_1 = ... mm

L_2 = ... mm

L_3 = ... mm

L_4 = ... mm

Date .....

Ordered by .....

Company .....

Street .....

City .....

Signature .....

Mistakes and omissions excepted, subject to change without notice.

Jacob elektronische Mess- und Regelgeräte GmbH, Düsseldorfer Straße 16, D-71332 Waiblingen Tel.: 07151/56806 60 Fax: 07151/56806 79

Level electrodes

Type 533.... – 593....

Other designs upon request.
All lengths can be adjusted upon request.

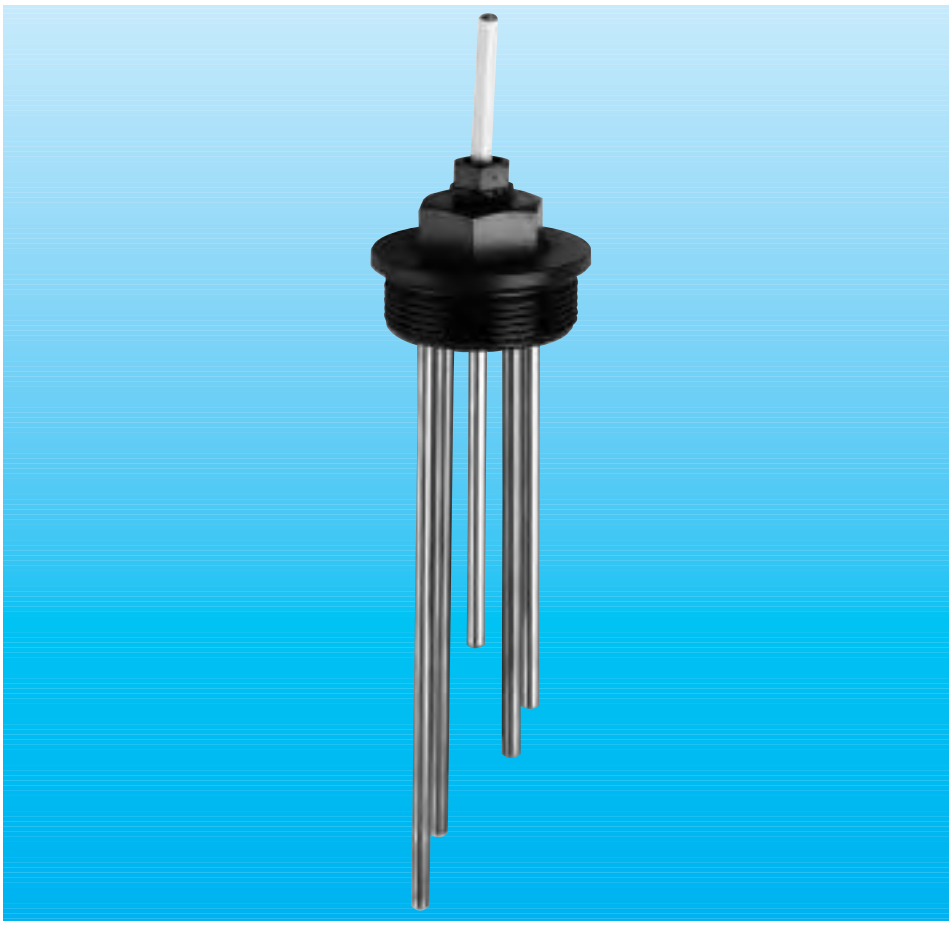

	Order ID 533.011.00	553.011.00	563.011.00	573.011.00	583.011.00	593.011.00
	Material					
Electrode	VA	VA	VA	VA	VA	VA
Insulation	PTFE	PP	PTFE	PP	PTFE	PTFE
Screw connection	PTFE	PVC	VA	PP	PVDF	MS
Operational data of the standard model						
Working temp. Cont./temp. with PVC cable	90 °C / 90 °C	55 °C / 65 °C	90 °C / 90°C	90 °C / 90°C	90 °C / 90 °C	90 °C / 90 °C
Working temp. Cont./temp. with silicone cable	150 °C / 150 °C	55 °C / 65 °C	150 °C / 150 °C	90 °C/ 110 °C	110 °C / 130 °C	150 °C / 150 °C
[2] max. admis. working pres.	5 bar	5 bar	5 bar	5 bar	5 bar	5 bar
Ø electrodes	up to 8 mm, also available in titanium or tantalum					
No. of elektrcdes	up to 5 possible uncovered or Teflon-coated					

[2] Data relate to the ambient temperature T = 20 °C

Mistakes and omissions excepted, subject to change without notice.

Order Fax

Level electrodes Type 533.... – 593....

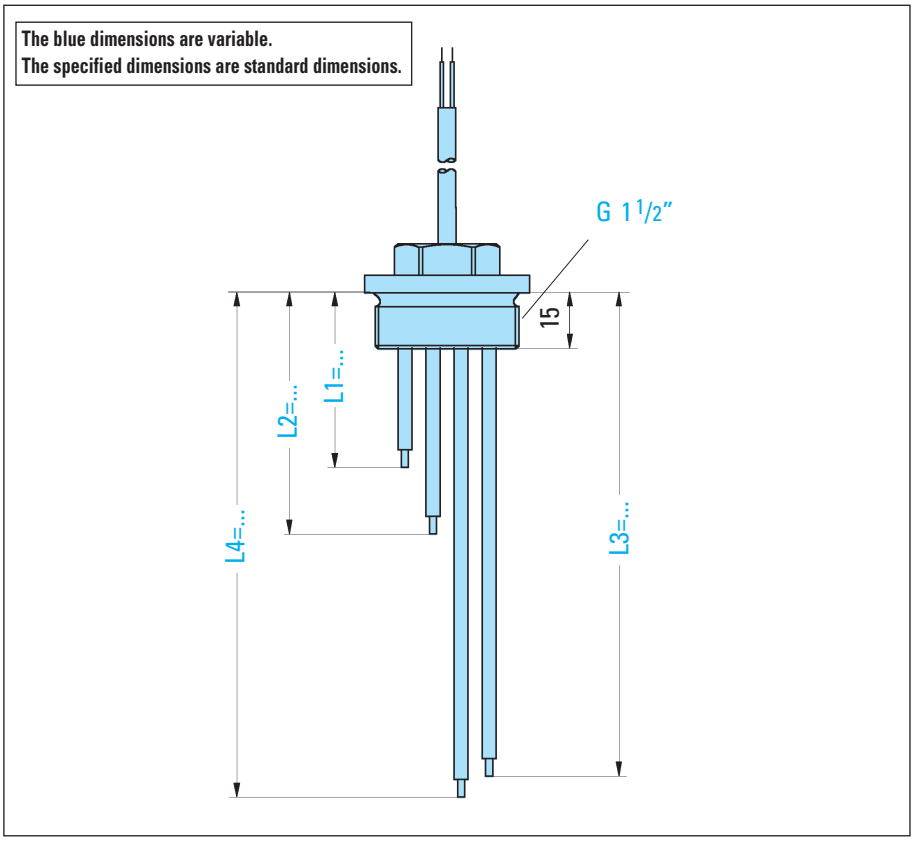

Please copy the order form, complete the list below with the desired dimensions, and then use the copy as order form.

	Type number
Electrode	
Screw connection	
Cable silicone/PVC	Length in metres:
Working temperature	°C:
Working pressure	bar:
Medium	
Order quantity	Units:
Ø of electrodes	
No. of electrodes	

L_1 = ... mm

L_2 = ... mm

L_3 = ... mm

L_4 = ... mm

L_5 = ... mm

Date .....

Ordered by .....

Company .....

Street .....

City .....

Signature .....

Mistakes and omissions excepted, subject to change without notice.

Level electrodes for lateral installation

Type 507.... –548....

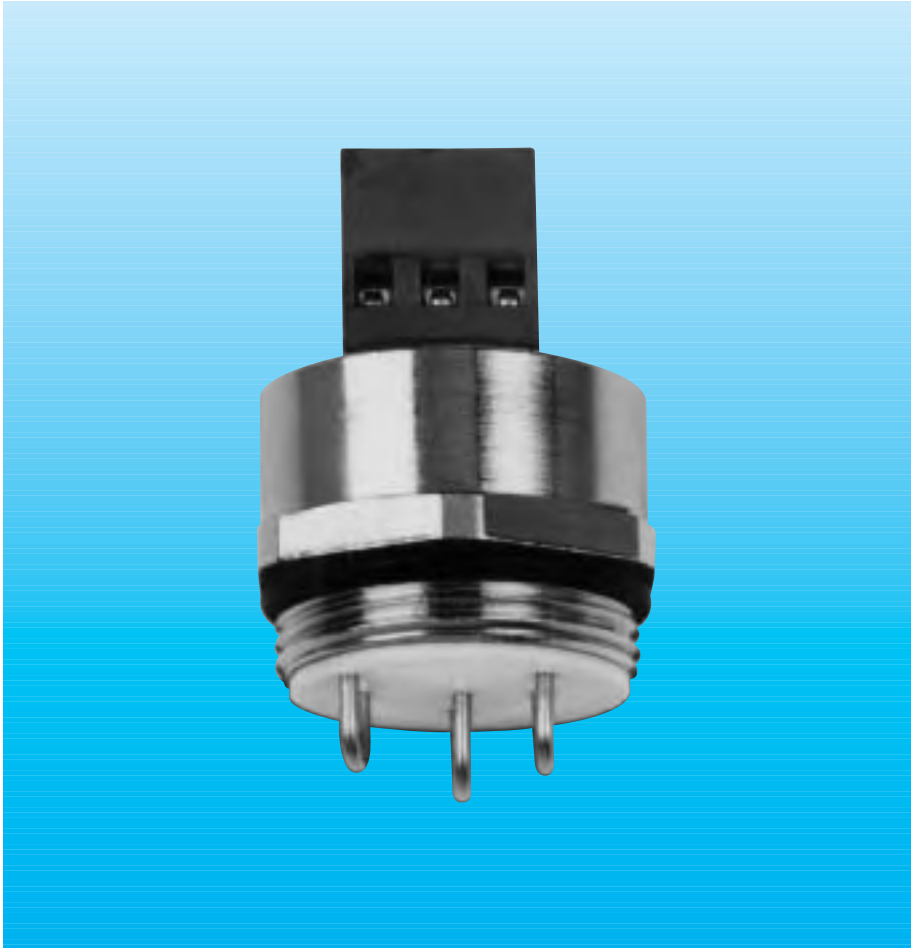

The type number is designed for two electrodes. Another "1" is added between the periods for each additional electrode.
The distances of the electrodes can be freely chosen under consideration of the entire dimensions.
Upon request and against extra charge a fitting counternut is also supplied.
Other designs upon request.

Thread	SW	Order ID 5□.011.00
PG 7x5	14	507
PG 9x5	17	509
PG 11x5	20	511
PG 13x5	22	513
PG 16x5	24	516
PG 21x5	30	521
Electrode		VA
Insulation		PA/PTFE
Screw connection		MS
		Operational data of the standard model
Working temp. Cont./temp.		100 °C
[2] max. admis. working pres.		3 bar
Ø electrodes		1,5 mm
No. of electrodes		depends upon size and distances

[2] Data relate to the ambient temperature T = 20 °C

Mistakes and omissions excepted, subject to change without notice.

Order Fax

Level electrodes for lateral installation Type 507.... –548....

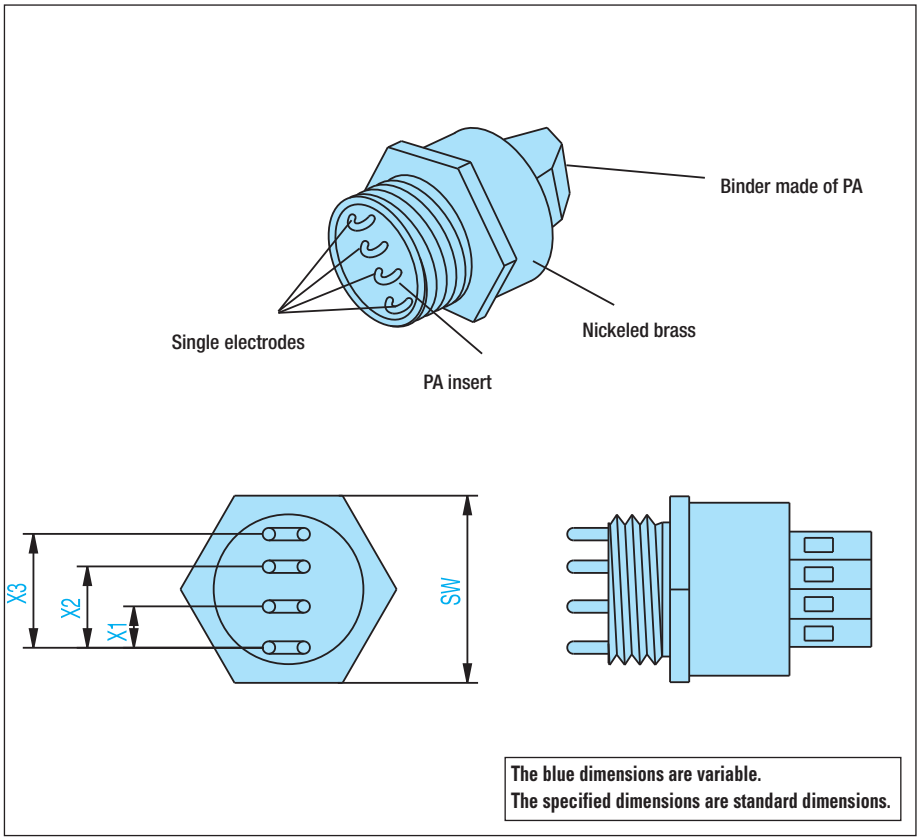

Please copy the order form, complete the list below with the desired dimensions, and then use the copy as order form.

	Type number
Electrode	
Insulation	
Screw connection	
Working temperature	°C:
Working pressure	bar:
Medium	
Order quantity	Units:
Thread	

X_1 = ... mm
X_2 = ... mm
X_3 = ... mm
X_4 = ... mm
X_5 = ... mm

Date .....

Ordered by .....
Company .....
Street .....
City .....

Signature .....

Mistakes and omissions excepted, subject to change without notice.

Jacob elektronische Mess- und Regelgeräte GmbH, Düsseldorfer Straße 16, D-71332 Waiblingen Tel.: 07151/568060 Fax: 07151/568079

Level electrodes with integrated switchgear

Type 570.731 - 570.791



General

The conductive level measurement is used when no other measuring method can be implemented for reasons of space or temperature. The conductive measuring method is cost-effective, in particular if very large or very small level differences are to be recorded. Using the limiting value recording, however, only electrically conductive media can be monitored, because the electric circuit is closed and a measuring current flows from the first electrode via the medium to the second electrode if the earth electrode and the meter electrode are touched by the medium. Thereby, one or more relays is (are) switched in the corresponding evaluation electronics which is (are) equipped with a floating change-over contact. These relays are time-delayed in order to avoid a fluttering of the relay or faulty measurements in case of restless or hunting media.

Screw connection	**Order ID**						
	570.731. ☐	**570.741.** ☐	**570.751.** ☐	**570.761.** ☐	**570.771.** ☐	**570.781.** ☐	**570.791.** ☐
R 1 1/2"	00	00	00	00	00	00	00
R 1 "	01	01	01	01	01	01	01
R 2"	02	02	02	02	02	02	02
R 1/2"	12	12	12	12	12	12	12
R 3/4"	34	34	34	34	34	34	34
Material	PTFE	PA	PVC	VA	PP	PVDF	MS
Operational data of the standard model							
Relay options	1 floating change-over contact						
Display	1 LED						
Level reached	LED lights up						
Case	Alu IP 66						
Power supply	24 V DC						
Material electrodes	VA 1.4571						
Material insulation	PTFE						

The level electrode type 570.731.00 – 570.791.34 is available in different versions which differ only with respect to the screw connection. The electrode serves for the conductive limiting value recording and works with correspondingly designed electrodes. An alternate voltage is provided as measuring voltage which avoids that an electrolysis occurs at the electrodes which would happen in the case of direct current (i.e. material denudation, i.e. destruction on the first electrode and material accumulation on the second electrode). With respect to the low-potential circuits, no protection measures against accidental contact are required because the appliance works with an extra-low voltage according to VDE 0 100 Part 410.
In the connecting box of the appliance, 1 potentiometer named P2 is installed on the evaluation electronics for the adjustment of the sensitivity of the low-potential circuits. Thus, the appliance can be adapted to media with different electric conductance values.
If the electrodes are touched by a conductive medium, the measuring circuit is closed and the corresponding relay picks up. This switching status is displayed by the light-emitting diode. The response delay is of approximately 2 seconds (can be omitted or extended to a certain extent upon request).

Mistakes and omissions excepted, subject to change without notice.

Order Fax

Level electrode with integrated switchgear Type 570.731 – 570.791

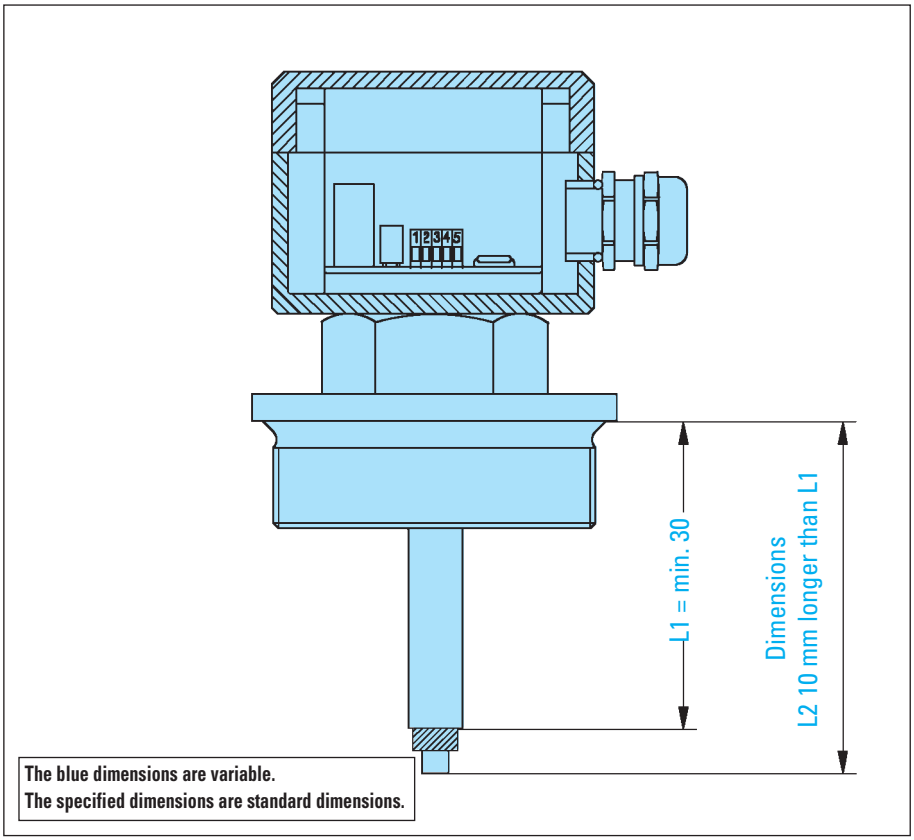

Please copy the order form, complete the list below with the desired dimensions, and then use the copy as order form.

	Type number
Order quantity	Units:

L_1 = ... mm

L_2 = ... mm

Date .....

Ordered by .....
Company .....
Street .....
City .....

Signature .....

Mistakes and omissions excepted, subject to change without notice.

Magnetic switches

Magnetschalter

Commutateurs magnétiques

Interruttori elettromagnetici

Interuptores electromagnéticos



Jacob®

Magnetic switches

Design

The magnetic switch consists of 2 components: the actual switch and a switching magnet. The magnetic switch is equipped with a case of synthetic material or metal in which a reed contact containing an insulating compound is cast-in. The contact studs dispose of a coat of rhodium or a special alloy and a ventilation duct of 0.2 - 0.3 mm in the contact zone.
With respect to the cradle switches, the contact is built in on the one side of the case, the switching magnet on the other side.
The magnetic switches are supplied with the following contact types:

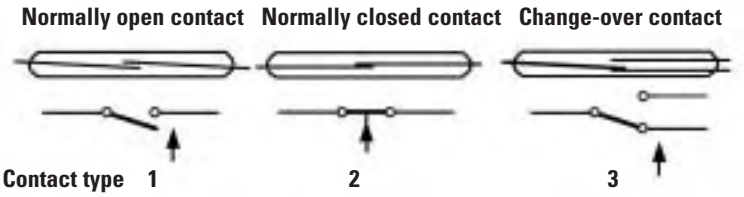

via a tightly cast-in PVC cable with a length of 1 metre or via a plug connection.
Switches with PVC cable can be used at temperatures from -10°C up to +80°C.
Upon request, the magnetic switches are supplied also with a longer cable or with silicone cable which is suited for temperatures from -40°C up to +180°C.

Special designs

The existing magnetic switches are subject to a constant development and are supplemented by new designs. In case of need, we also manufacture special designs for special fields of use according to the wishes of our customers.

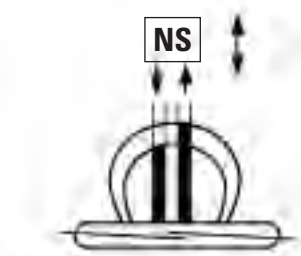

Fig. 1

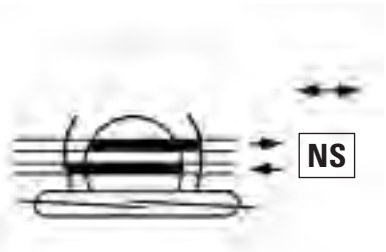

Fig. 2

Function

If the switching magnet is moved towards the overlapping contact studs, the studs attract each other or repel mutually and close or open the contact.
With respect to the cradle switches, an iron switching flag is inserted between contact and switching magnet which triggers the switching function. The closing and opening of the contacts is performed precipitously because the magnetic field changes in the air gap. The switching distance at which the magnetic switch can be actuated depends on the size of the switching magnet and on the direction of actuation.
Furthermore, the normally open contact and the change-over contact are also available in bistable design, i.e. with 2 stable switching points. With respect to these versions and with respect to the normally closed contact, a biasing magnet is integrated for the stabilization of the switching position. The connection of the magnetic switch is performed

Switching distance

The switching point distance of the switching magnet from the magnetic switch is referred to as switching distance. The switching magnet must be moved back in direction of its home position in order to enable the magnetic switch to switch back.

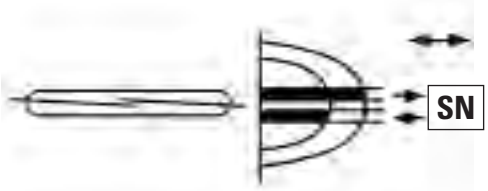

Fig. 3

Switching hysteresis

The difference path of the switching magnet between on and off position is referred to as switching hysteresis. The hysteresis depends upon the size of the switching magnet, the distance of actuation and the starting direction of the switching magnet.
The following figures show some possible starting directions and the dependence of the switching hysteresis on the switching distance for a normally open contact or for the normally open contact side of the change-over contact, respectively.

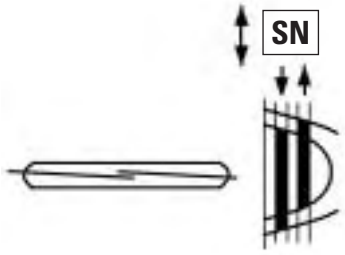

Fig. 4

SN is a symbold for a magnet

Mistakes and omissions excepted, subject to change without notice.

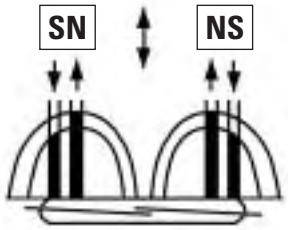

Fig. 5



Fig. 6



Fig. 7
Bistable contact

With respect to the normally closed contact, the switching function is reversed. If the switching magnet is moved in the direction of the arrow up to the dark field, then the magnetic switch switches on (off at normally closed contact).

The switch only switches off again when the switching magnet is moved in the area of the light field. With respect to the starting direction according to **Fig. 2** it must be noted that the switching distance must be at least 20% of the maximum switching distance, if a strong switching magnet is moved beyond the disconnection curve. Otherwise, the magnetic switch can switch once more. The same applies to the starting direction according to **Fig. 7** which shows a bistable switch.

This bistable switch offers the advantage that the switching position once taken is maintained until the switching magnet is moved back again. By exchanging the north pole and the south pole, the switching function is reversed.

With respect to the magnetic switches with normally open and change-over contacts, the pole direction of the switching magnets does not affect the switching function; it can be reversed.

With respect to the normally closed contacts, the position of south pole and north pole must be taken into consideration for the starting direction. As indicated in **Fig. 6**, the left half of the switch must be exchanged or turned by 180°C.

In addition to the indicated starting directions for the switching magnets, also other starting directions are admissible, e.g., the switching magnet can be moved over or under the magnetic switch crosswise or in lengthwise direction, or it can be rotated about its longtudinal axis.

Switching time

The switching time, including bouncing time, is, dependent upon the size of the switch, between 0.5 - 2 ms, the opening time of the contacts is 0.5 ms.

Switching point accuracy

The switching point accuracy is ± 0.01 mm, provided that the ambient conditions do not change. Due to a temperature change, the switching distance and thus the switching point accuracy change.

Shake resistance
Shock resistance test

The test is performed according to IEC publication 68-2-27, test Ea. (Shock acceleration 150-500 g, half sine wave, dependent upon size and type of contact). Due to this load an opened contact is neither closed again (without magnetic field) nor a contact opened with 80 AW is opened.

Vibration resistance

The test is performed according to IEC publication 68-2-6, test Fc. (Acceleration 10 g, in longitudinal axis and vertically thereto, excursion 0.75 mm, frequency range 10....2000 Hz, test period 90 minutes.). Due to this load an opened contact is neither closed again (without magnetic field) nor a contact opened with 80 AW is opened.

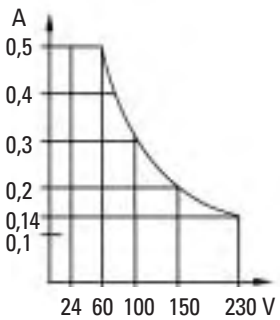

Fig. 8

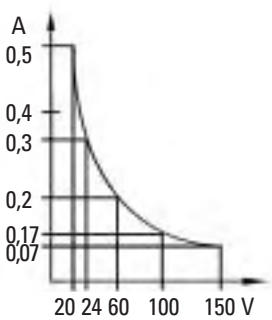

Fig. 9

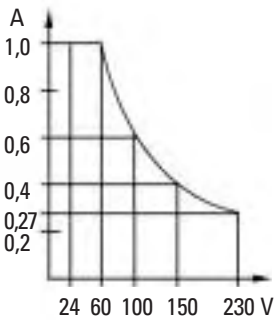

Fig. 10

Mistakes and omissions excepted, subject to change without notice.

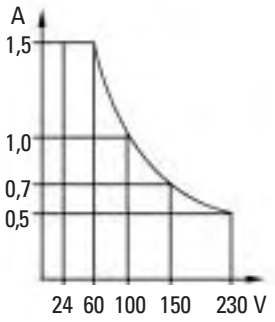

Fig. 11

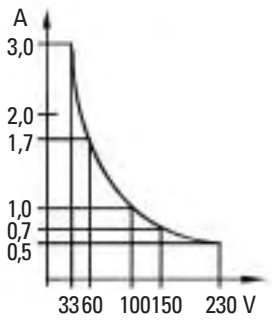

Fig. 12

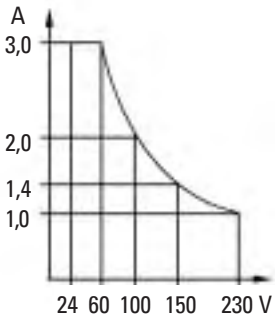

Fig. 13

Switching capacity

The lifetime of the contacts depends upon the voltage level, the load type and level and upon the switching frequency. The indicated power, voltage and current must not be exceeded.

The Figures 8-13 show the dependence of the switching capacity on the voltage. In case of switching high currents of inductive consumers, such as magnetic valves, contactors, etc., high switching voltages and, in connection therewith, switching sparks develop which reduce the lifetime of the contacts. It must be particularly noted that a current ten times higher can flow when an incandescent lamp is switched on. If the maximum switching capacity is exceeded, the lifetime is reduced correspondingly.

In case of a strong overload the contacts may bond. Thus, we recommend the following for cases of high load:

1. Use a contact protective relay, e.g. type 270.750, 270.751, 270.752, or
2. parallel connect a RC element to the load in case of alternate or direct voltages.

The magnetic switches equipped with a bistable or a normally closed contact must not be touched with a strong switching magnet. Otherwise, the built-in biasing magnet may be weakened and the switching path may change. The minimum distance to the high-power electric cables which run parallel with the magnetic switches should be at least 50 mm.

Cradle switch

For the cradle switches, an iron switching flag is to be installed such that it can be moved into the cradle approximately in the centre of the cradle. With respect to the type series 107, the lateral distance to the next cradle switch must be at least 80 mm, with respect to the type series 108 it must be approximately 30 mm.

Switching distance

The indicated maximum switching distance refers to the assembly on non-iron materials, plastics, wood, etc. This switching distance decreases if iron parts with a large surface are placed too close to the magnetic switch.

Assembly

With respect to the assembly of the magnetic switches of the type series 105 to 108 onto an iron surface, the switching distance changes only slightly. For the magnetic switches of the type series 103, 104 and 109, we recommend an intermediate layer made of non-iron materials, plastics, etc.

If multiple magnetic switches and switching magnets are to be mounted side by side, the lateral distance between the single components must be 1.5 times larger than the maximum possible switching distance for which the magnetic switch with the used switching magnet still switches (e.g. on position 10 mm, off position 20 mm: distance 1.5 x 20 = 30 mm).

If this distance is not complied with, a neighboured magnetic switch may be actuated at the same time. If switching magnets are to be arranged side by side, then a south pole magnet must be followed by a north pole magnet for distances smaller than 50 mm in order to interrupt the magnetic field and to enable each magnet to actuate the magnetic switch. The mutual influence of neighboured magnetic switches can be avoided by the use of appropriate shielding plates. Due to this shielding, the switching distance slightly decreases.

Round switching magnets

The round switching magnets with sink hole (type series 200.9) are to be mounted by means of a brass screw. If they are mounted on iron the magnetic field is strengthened, and the switching distance slightly increases. For all other switching magnets, however, the magnetic field is weakened by an iron foundation, and the switching distance decreases.

Bar-form switching magnets

The bar-form switching magnets (type series 100… - 102…) must not be mounted directly on iron materials.

Mistakes and omissions excepted, subject to change without notice.

Type code for magnetic switches

Case form	Standard material									Page
Flat bush	PA	Typ	1	0	0	0				5.5
Flat bush with thread stud	PA	Typ	1	0	1	0				5.7
Thread bush	MS	Typ	1	0	2	0				5.9
rectangular	PA	Typ	1	0	3	0				5.11
rectangular	PA	Typ	1	0	4	0				5.11
rectangular	PA	Typ	1	0	5	0				5.13
rectangular	PA	Typ	1	0	6	0				5.13
Cradle **	PA	Typ	1	0	7	0				5.21
Cradle **	PA	Typ	1	0	8	0				5.21
rectangular	PA	Typ	1	0	9	0				5.11
rectangular	AL	Typ	1	1	2	0				5.15
rectangular	AL	Typ	1	1	3	0				5.15
rectangular **	PA	Typ	1	1	4	0				5.19
rectangular	PA	Typ	1	1	5	0				5.17
rectangular	PA	Typ	1	1	6	0				5.23
rectangular **	PA	Typ	1	1	7	0				5.19

Design Type 100	101	102							
** bush Ø 6	with M 8 x 0,75		6						
** bush Ø 8	with PG 7	with M 8 x 0,75	8						
		with M 10 x 1	1						
** bush Ø 12	with PG 9	with M 12 x 1	2						
Contact capacity									
Standard 230 V AC/DC 0,5 A 10 VA				0					
230 V AC 1 A 60 VA **				1					
230 V AC 1 A 35 VA				2					
Special contacts upon request				3					
bistable contact (power upon request) **				5					
Contact function normally open contact	max. 230 VAC 1A 60 VA				1				
Contact function normally closed contact	max. 230 VAC 1A 35 VA				2				
Contact function change-over contact[1)]	max. 230 VAC 1A 35 VA				3				
Possible materials for case types	100. 101. 102.						0		
PVC							1		
PA							2		
PP							3		
PVDF							4		
PTFE							5		
Special steel 14571							6		
Aluminium							8		
Brass							9		
Connection type	Cable							0	
	Plug **							2	

Components marked with ** cannot be combined.
We also manufacture magnetic switches which are not included in the following product line, but are specifically tailored to the fields of use of our customers. Thereby, all above materials may be used.

[1)] Maximum switching capacity with change-over contact 230 VAC, 1 A, 35 A.

Mistakes and omissions excepted, subject to change without notice.

Magnetic switches

Type 100....

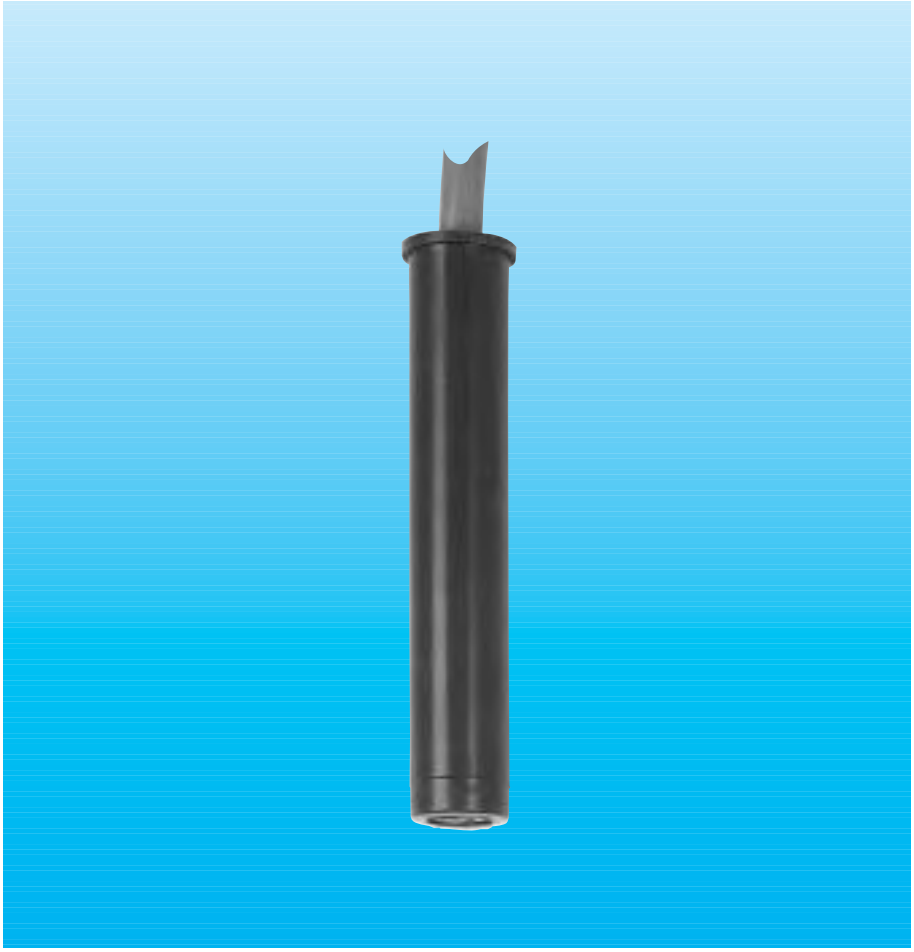

If bistable switching is desired, the number **"5"** is added to the order ID, e.g. **100.253.00.**
Other designs and switching capacities upon request.
See the last page for the appropriate switching magnets.

	Order ID 100.60□.00	100.80□.00	100.20□.00
Normally open contact	601	801	201
Normally closed contact	602	802	202
Change-over contact	603	803	203
Switching capacity			
Normally open contact	230 V /0,5 A / 30 VA	230 V /0,5 A / 30 VA	230 V /1,0 A / 60 VA
Normally closed contact	100 V /0,25 A / 3 VA	100 V /0,25 A / 3 VA	230 V /1,0 A / 35 VA
Change-over contact	100 V /0,25 A / 3 VA	100 V /0,25 A / 3 VA	230 V /1,0 A / 35 VA
Working temp.			
with PVC cable	90 °C		
with silicone cable	110 °C		
Connection cable	1 metre PVC or silicone 0,14 - 0,75 mm^2		

Mistakes and omissions excepted, subject to change without notice.

Order Fax

Magnetic switches Type 100....

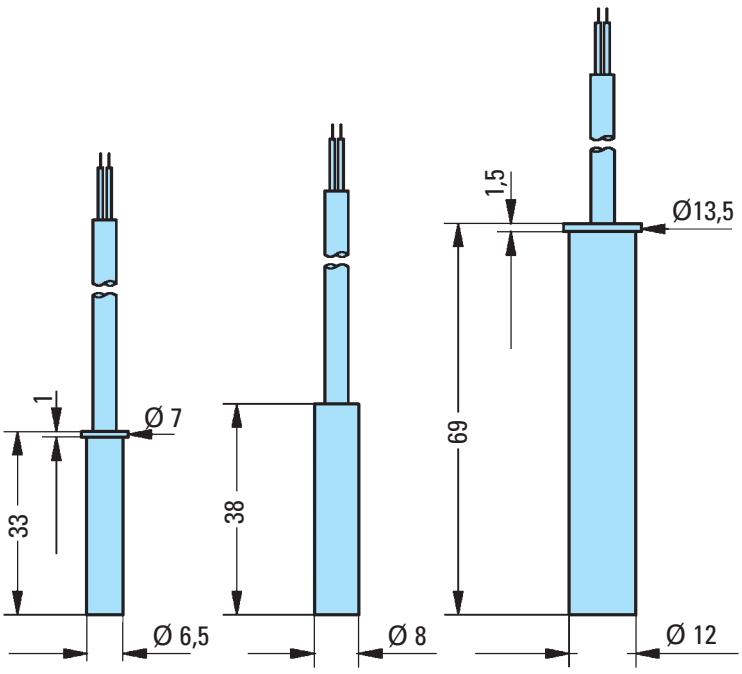

100.601.00	100.801.00	100.201.00
100.602.00	100.802.00	100.202.00
100.603.00	100.803.00	100.203.00

Please copy the order form, complete the list below with the desired dimensions, and then use the copy as order form.

					Type number
Connection cable	Silicone ☐		PVC ☐		
Working temperature				°C:	
Switching capacity		V:	A:	VA:	
Order quantity				Units:	

Date .....

Ordered by .....
Company .....
Street .....
City .....

Signature .....

Mistakes and omissions excepted, subject to change without notice.

Jacob elektronische Mess- und Regelgeräte GmbH, Düsseldorfer Straße 16, D-71332 Waiblingen Tel.: 07151/56806 60 Fax: 07151/56806 79

Magnetic switches
Type 101....

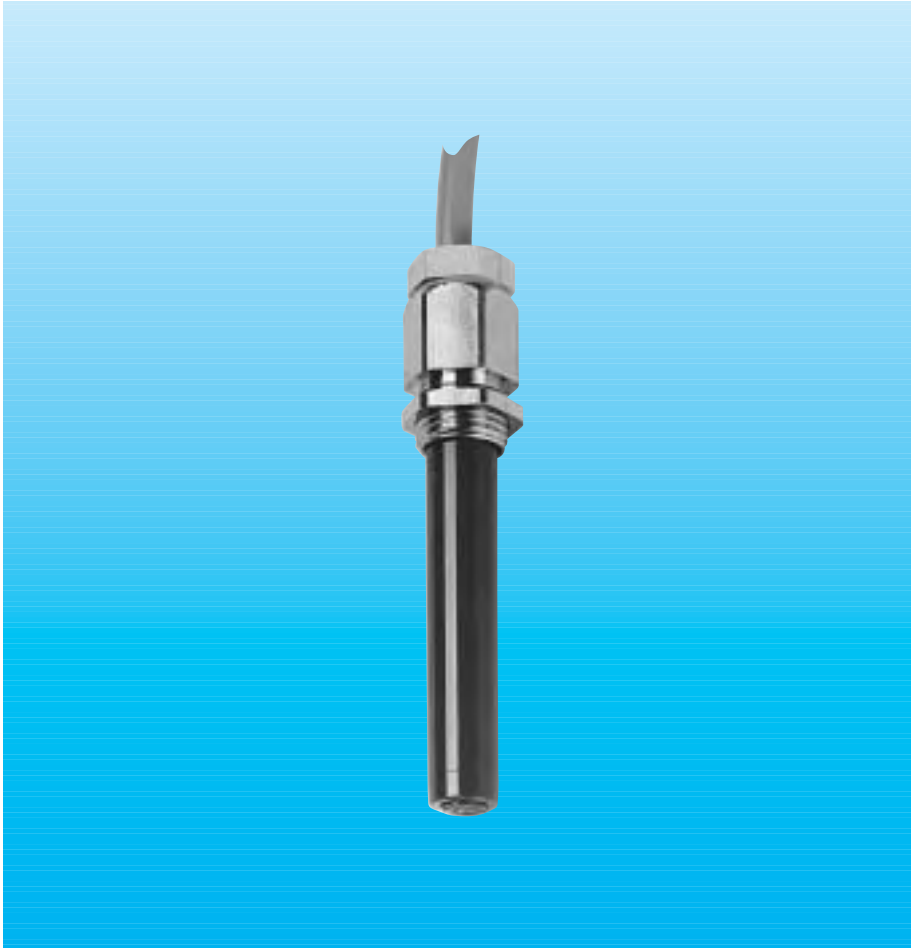

If bistable switching is desired, the number **"5"** is added to the order ID, e.g. **101.253.00.**
Other designs and switching capacities upon request.
See the last page for the appropriate switching magnets.

	Order ID 101.60□.00	101.20□.00
Normally open contact	601	201
Normally closed contact	602	202
Change-over contact	603	203
Switching capacity		
Normally open contact	230 V /0,5 A / 30 VA	230 V /1,0 A / 60 VA
Normally closed contact	100 V /0,25 A / 3 VA	230 V /1,0 A / 35 VA
Change-over contact	100 V /0,25 A / 3 VA	230 V /1,0 A / 35 VA
Working temp.		
with PVC cable	90 °C	
with silicone	110 °C	
Connection cable	1 metre PVC or silicone 0,14 - 0,75 mm^2	

Mistakes and omissions excepted, subject to change without notice.

Order Fax

Magnetic switches Type 101....

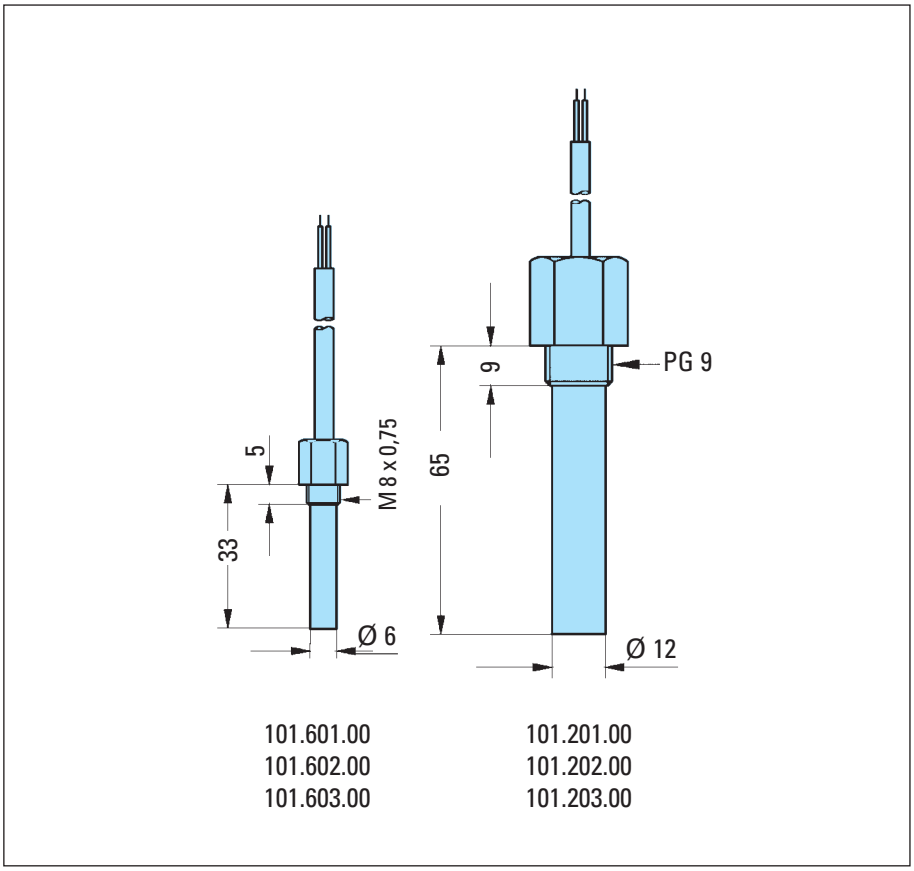

101.601.00
101.602.00
101.603.00

101.201.00
101.202.00
101.203.00

Please copy the order form, complete the list below with the desired dimensions, and then use the copy as order form.

				Type number
Connection cable	Silicone ☐	PVC ☐		
Working temperature				°C:
Switching capacity	V:	A:		VA:
Order quantity				Units:

Date .....

Ordered by .....
Company .....
Street .....
City .....

Signature .....

Mistakes and omissions excepted, subject to change without notice.

Jacob elektronische Mess- und Regelgeräte GmbH, Düsseldorfer Straße 16, D-71332 Waiblingen Tel.: 07151/56806 60 Fax: 07151/56806 79

Magnetic switches
Type 102....

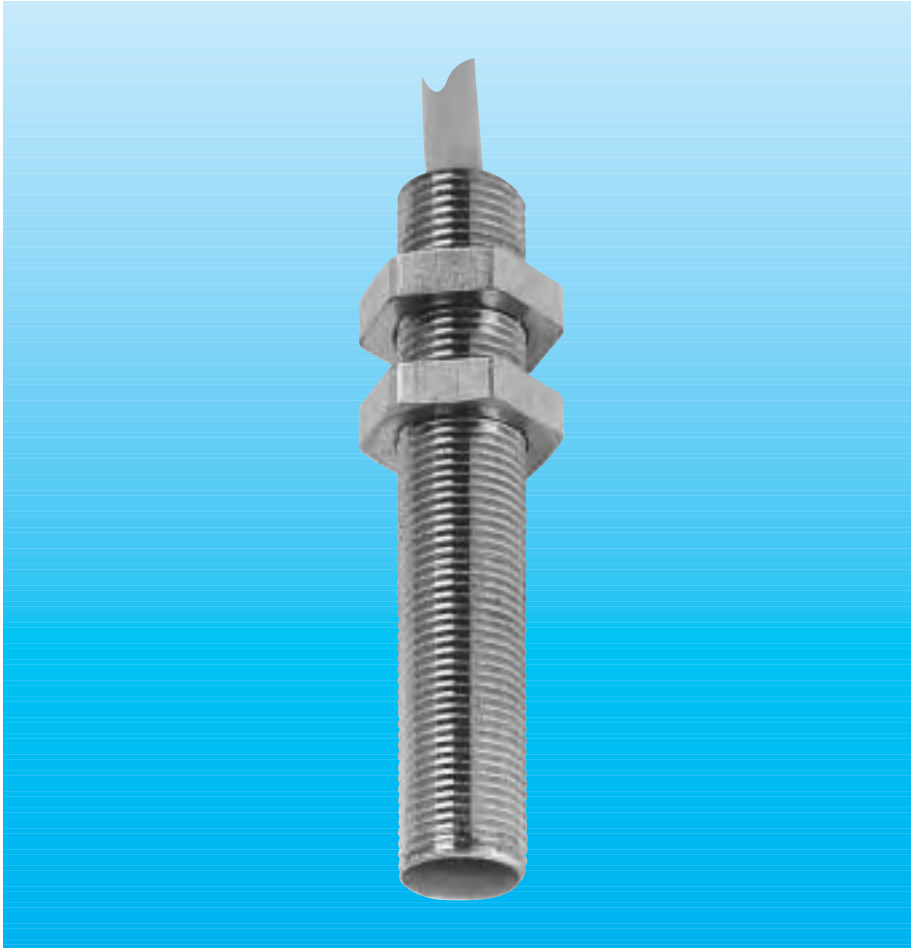

If bistable switching is desired, the number **"5"** is added to the order ID, e.g. **102.253.00.**
Other designs and switching capacities upon request.
See the last page for the appropriate switching magnets.

	Order ID 102.80 .00	102.10 .00	102.20 .00	102.20 .99
Normally open contact	801	101	201	201
Normally closed contact	802	102	202	202
Change-over contact	803	103	203	203
Switching capacity				
Normally open contact	230 V /0,5 A / 30 VA	230 V /1,0 A / 60 VA	230 V /1,0 A / 60 VA	230 V /1,0 A / 60 VA
Normally closed contact	100 V /0,25 A / 3 VA	230 V /1,0 A / 35 VA	230 V /1,0 A / 35 VA	100 V /0,25 A / 3 VA
Change-over contact	100 V /0,25 A / 3 VA	230 V /1,0 A / 35 VA	230 V /1,0 A / 35 VA	100 V /0,25 A / 3 VA
Working temp.				
with PVC cable	90 °C			
with silicone cable	110 °C			
Connection cable	1 metre PVC or silicone 0,14 - 0,75 mm^2			

Mistakes and omissions excepted, subject to change without notice.

Order Fax

Magnetic switches Type 102....

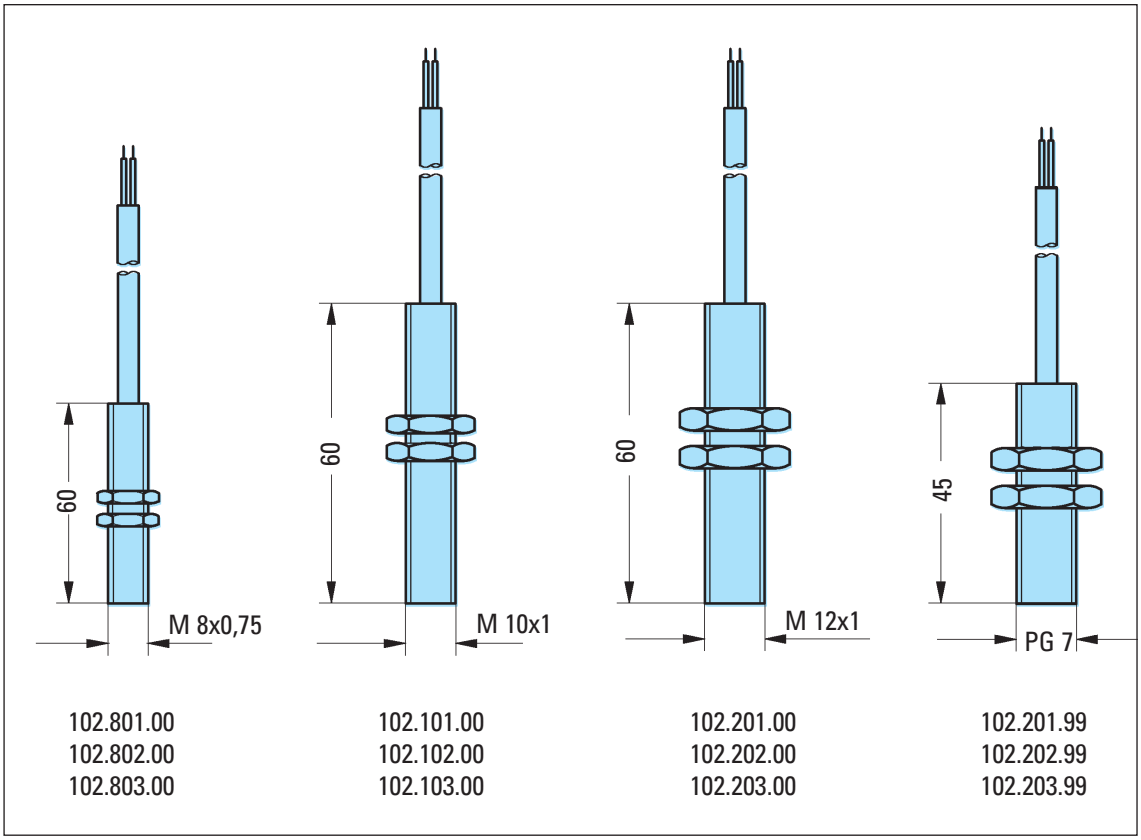

102.801.00 102.802.00 102.803.00	102.101.00 102.102.00 102.103.00	102.201.00 102.202.00 102.203.00	102.201.99 102.202.99 102.203.99

Please copy the order form, complete the list below with the desired dimensions, and then use the copy as order form.

					Type number
Connection cable	Silicone ☐		PVC ☐		
Working temperature				°C:	
Switching capacity		V:	A:	VA:	
Order quantity				Units:	

Date .....

Ordered by .....
Company .....
Street .....
City .....

Signature .....

Mistakes and omissions excepted, subject to change without notice.

Jacob elektronische Mess- und Regelgeräte GmbH, Düsseldorfer Straße 16, D-71332 Waiblingen Tel.: 07151/568060 Fax: 07151/568079

Magnetic switches

Type 103....
Type 104....
Type 109....

If bistable switching is desired, the number **"5"** is added to the order ID, e.g. **103.053.00.**
Other designs and switching capacities upon request.
See the last page for the appropriate switching magnets.

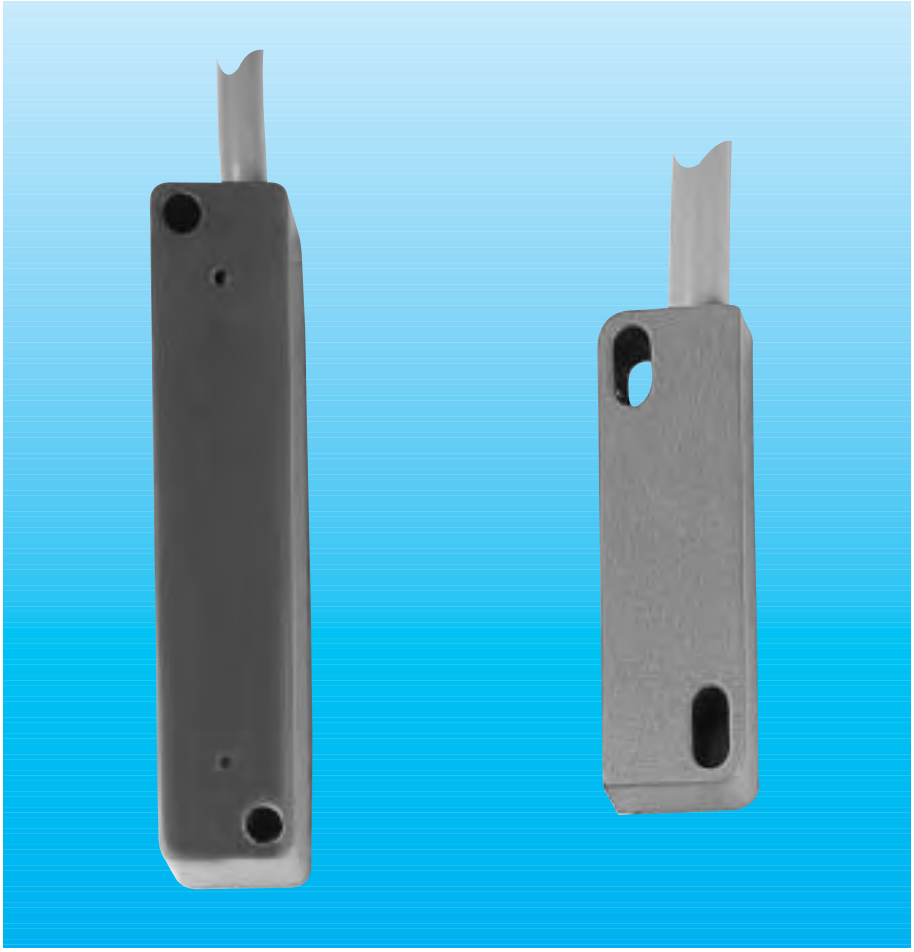

	Order ID 103.00 .00	104.00 .00	109.00 .00
Normally open contact	001	001	001
Normally closed contact	002	002	002
Change-over contact	003	003	003
Switching capacity			
Normally open contact	230 V /1,0 A / 60 VA	230 V /0,5 A / 30 VA	230 V /0,5 A / 30 VA
Normally closed contact	230 V /1,0 A / 35 VA	100 V /0,25 A / 3 VA	100 V /0,25 A / 3 VA
Change-over contact	230 V /1,0 A / 35 VA	100 V /0,25 A / 3 VA	100 V /0,25 A / 3 VA
Working temp.			
with PVC cable	90 °C		
with silicone cable	110 °C		
Connection cable	1 metre PVC or silicone 0,14 - 0,75 mm^2		

Mistakes and omissions excepted, subject to change without notice.

Order Fax

Magnetic switches
Type 103.... Type 104.... and Type 109....

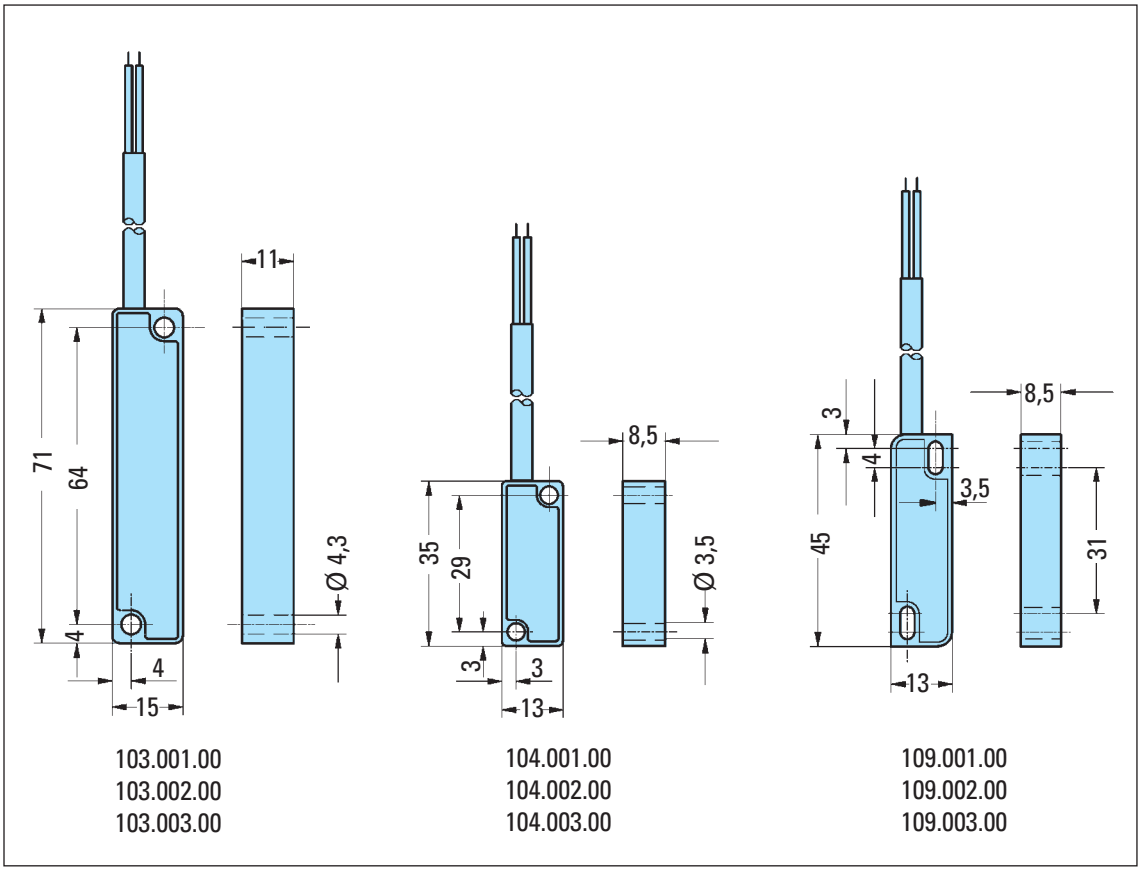

103.001.00
103.002.00
103.003.00

104.001.00
104.002.00
104.003.00

109.001.00
109.002.00
109.003.00

Please copy the order form, complete the list below with the desired dimensions, and then use the copy as order form.

				Type number
Connection cable	Silicone ☐	PVC ☐		
Working temperature				°C:
Switching capacity	V:	A:		VA:
Order quantity				Units:

Date .....

Ordered by .....
Company .....
Street .....
City .....

Signature .....

Mistakes and omissions excepted, subject to change without notice.

Jacob elektronische Mess- und Regelgeräte GmbH, Düsseldorfer Straße 16, D-71332 Waiblingen Tel.: 07151/568060 Fax: 07151/568079

Magnetic switches

Type 105....
Type 106....

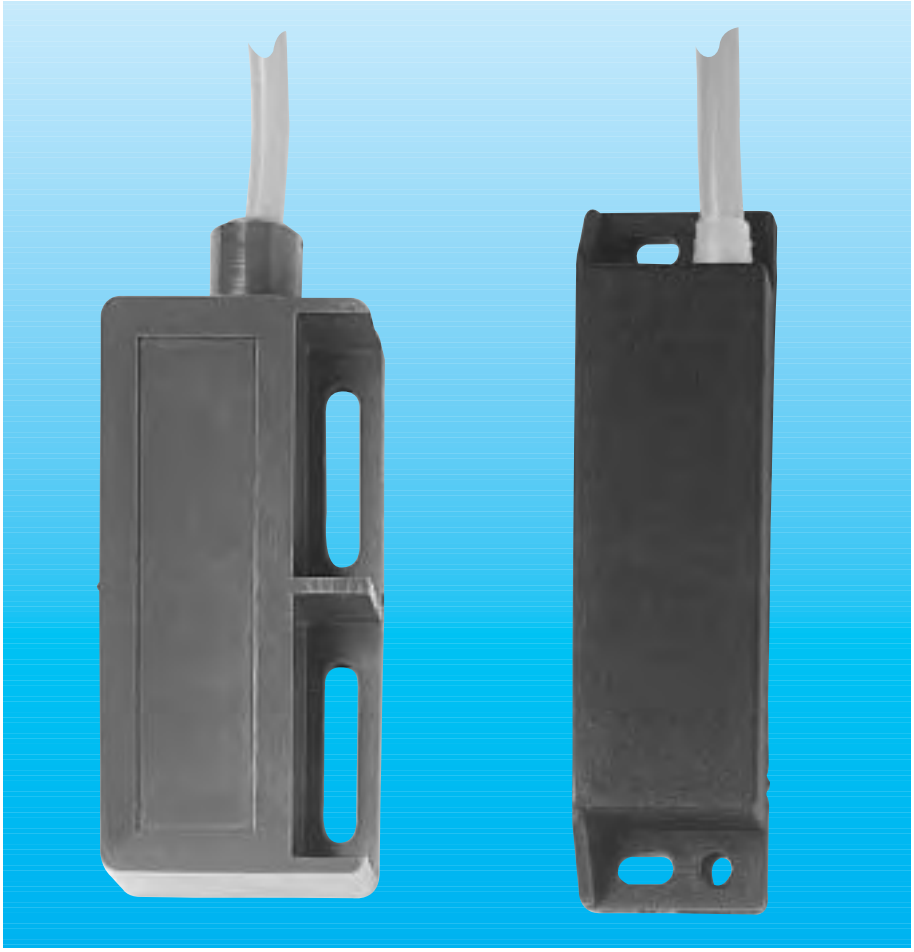

If bistable switching is desired, the number **"5"** is added to the order ID, e.g. **105.053.00.**
Other designs and switching capacities upon request.
See the last page for the appropriate switching magnets.

	Order ID 105.00 □ .00	106.00 □ .00
Normally open contact	001	001
Normally closed contact	002	002
Change-over contact	003	003
Switching capacity		
Normally open contact	230 V /1,0 A / 60 VA	230 V /1,0 A / 60 VA
Normally closed contact	230 V /1,0 A / 35 VA	230 V /1,0 A / 35 VA
Change-over contact	230 V /1,0 A / 35 VA	230 V /1,0 A / 35 VA
Working temp.		
with PVC cable	90 °C	
with silicone cable	110 °C	
Connection cable	1 metre PVC or silicone 0,14 - 0,75 mm^2	

Mistakes and omissions excepted, subject to change without notice.

Order Fax

Magnetic switches
Type 105.... and Type 106....

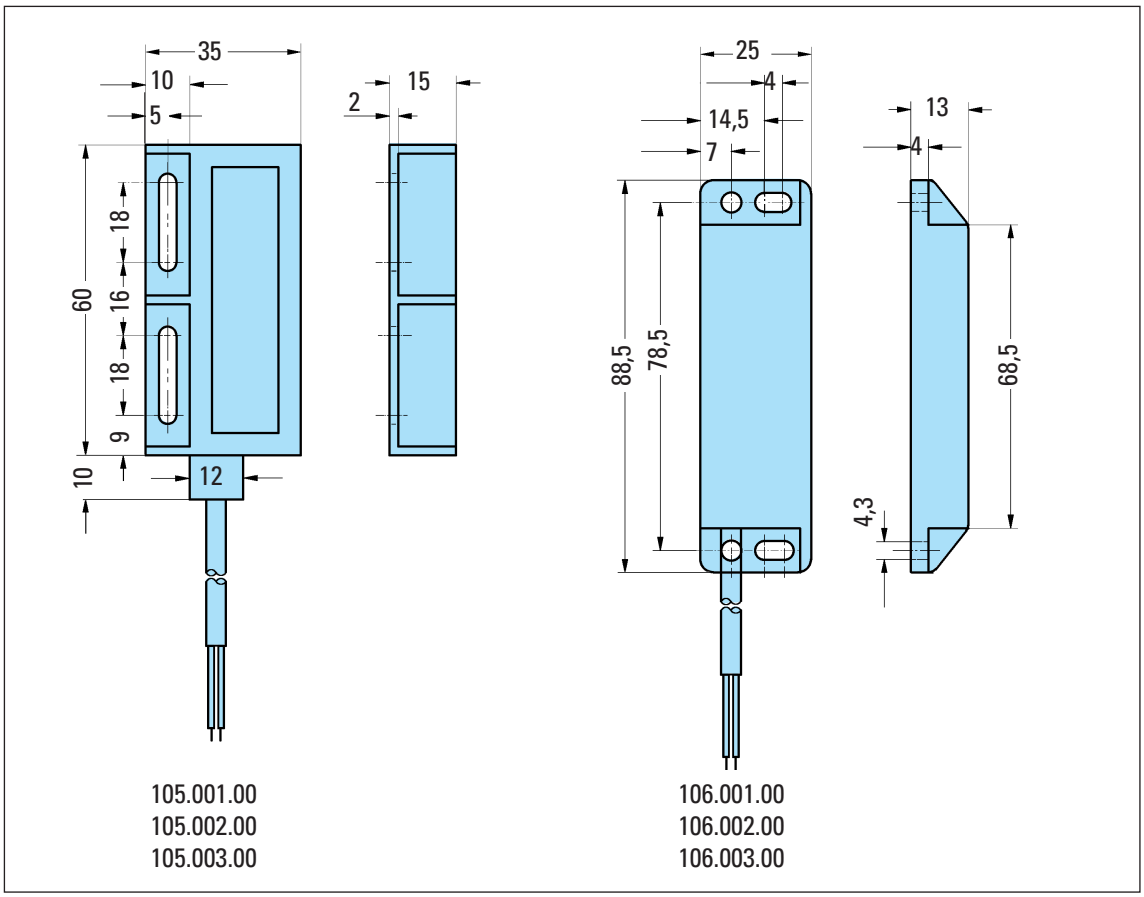

105.001.00
105.002.00
105.003.00

106.001.00
106.002.00
106.003.00

Please copy the order form, complete the list below with the desired dimensions, and then use the copy as order form.

				Type number
Connection cable	Silicone ☐	PVC ☐		
Working temperature				°C:
Switching capacity	V:	A:		VA:
Order quantity				Units:

Date .....

Ordered by .....
Company .....
Street .....
City .....

Signature .....

Mistakes and omissions excepted, subject to change without notice.

Jacob elektronische Mess- und Regelgeräte GmbH, Düsseldorfer Straße 16, D-71332 Waiblingen Tel.: 07151/56806 60 Fax: 07151/56806 79

Magnetic switches
Type 112....
Type 113....



If bistable switching is desired, the number **"5"** is added to the order ID, e.g. **113.053.00.**
Other designs and switching capacities upon request.
See the last page for the appropriate switching magnets.

	Order ID 112.00 .00	Order ID 113.00 .00
Normally open contact	001	001
Normally closed contact	002	002
Change-over contact	003	003
Switching capacity		
Normally open contact	230 V /1,0 A / 60 VA	230 V /1,0 A / 60 VA
Normally closed contact	230 V /1,0 A / 35 VA	230 V /1,0 A / 35 VA
Change-over contact	230 V /1,0 A / 35 VA	230 V /1,0 A / 35 VA
Workinge temp.		
with PVC cable	90 °C	
with silicone cable	110 °C	
Connection cable	1 metre PVC or silicone 0,14 - 0,75 mm^2	

Mistakes and omissions excepted, subject to change without notice.

Order Fax

Magnetic switches
Type 112.... and Type 113....

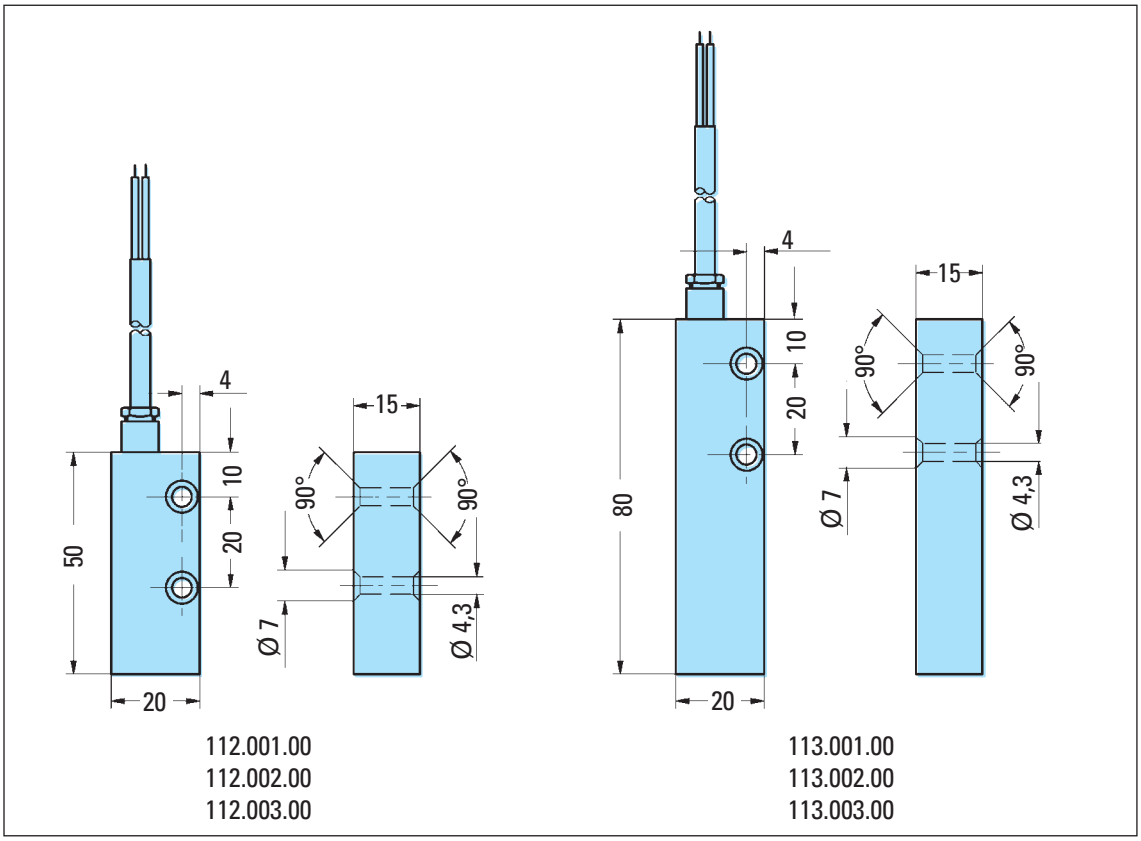

112.001.00
112.002.00
112.003.00

113.001.00
113.002.00
113.003.00

Please copy the order form, complete the list below with the desired dimensions, and then use the copy as order form.

				Type number
Connection cable	Silicone ☐	PVC ☐		
Working temperature			°C:	
Switching capacity	V:	A:	VA:	
Order quantity			Units:	

Date .....

Ordered by .....
Company .....
Street .....
City .....

Signature .....

Mistakes and omissions excepted, subject to change without notice.

Jacob elektronische Mess- und Regelgeräte GmbH, Düsseldorfer Straße 16, D-71332 Waiblingen Tel.: 07151/568060 Fax: 07151/568079

Magnetic switches
Type 115....

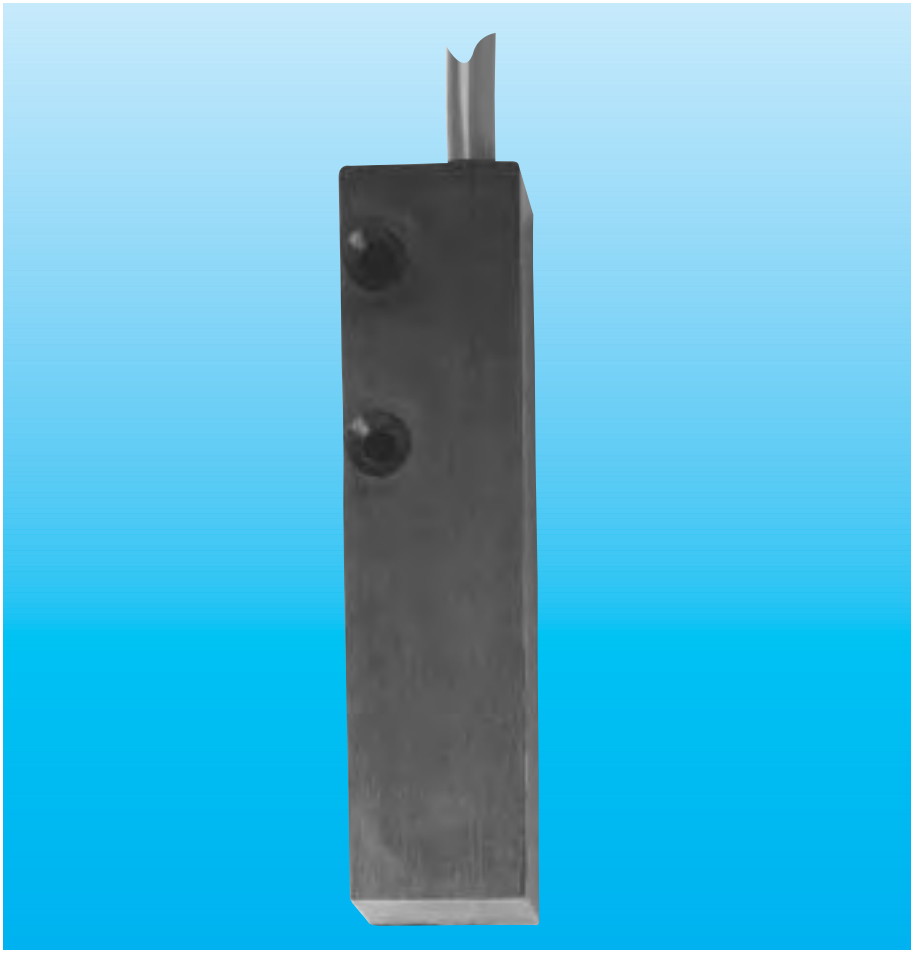

If bistable switching is desired, the number **"5"** is added to the order ID, e.g. **115.053.00.**
Other designs and switching capacities upon request.
See the last page for the appropriate switching magnets.

	Order ID 115.00 □ .00
Normally open contact	001
Normally closed contact	002
Change-over contact	003
Switching capacity	
Normally open contact	230 V /1,0 A / 60 VA
Normally closed contact	230 V /1,0 A / 35 VA
Change-over contact	230 V /1,0 A / 35 VA
Working temp.	
with PVC cable	90 °C
with silicone cable	110 °C
Connection cable	1 metre PVC or silicone 0,14 - 0,75 mm^2

Mistakes and omissions excepted, subject to change without notice.

Order Fax

Magnetic switches Type 115....

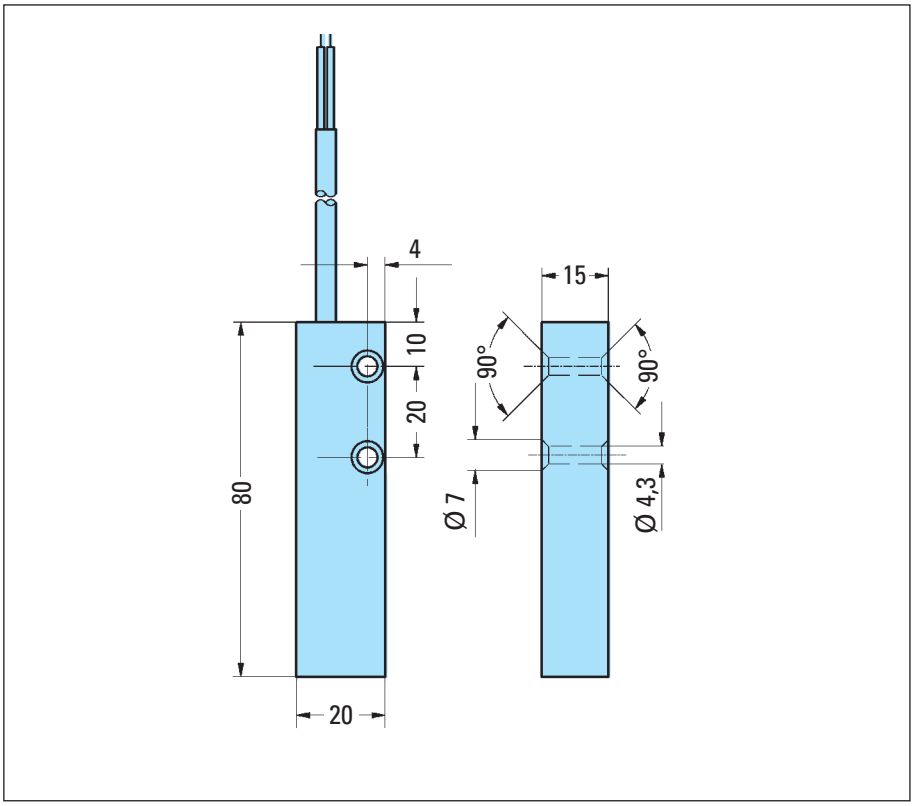

Please copy the order form, complete the list below with the desired dimensions, and then use the copy as order form.

					Type number
Connection cable	Silicone ☐		PVC ☐		
Working temperature				°C:	
Switching capacity		V:		A:	VA:
Order quantity				Units:	

Date .....

Ordered by .....
Company .....
Street .....
City .....

Signature .....

Mistakes and omissions excepted, subject to change without notice.

Jacob elektronische Mess- und Regelgeräte GmbH, Düsseldorfer Straße 16, D-71332 Waiblingen Tel.: 07151/568060 Fax: 07151/568079

Magnetic switches
Type 114....
Type 117....



If bistable switching is desired, the number **"5"** is added to the order ID, e.g. **114.053.00.**
Other designs and switching capacities upon request.
See the last page for the appropriate switching magnets.

	Order ID 114.00□.00	117.00□.00
Normally open contact	001	001
Normally closed contact	002	002
Change-over contact	003	003
Switching capacity		
Normally open contact	230 V /0,5 A / 20 VA	230 V /0,5 A / 20 VA
Normally closed contact	100 V /0,25 A / 3 VA	230 V /1,0 A / 35 VA
Change-over contact	100 V /0,25 A / 3 VA	230 V /1,0 A / 35 VA
Working temp.		
with PVC cable	90 °C	
with silicone cable	110 °C	
Connection cable	1 metre PVC or silicone 0,14 - 0,75 mm^2	

Mistakes and omissions excepted, subject to change without notice.

Order Fax

Magnetic switches
Type 114.... and Type 117....

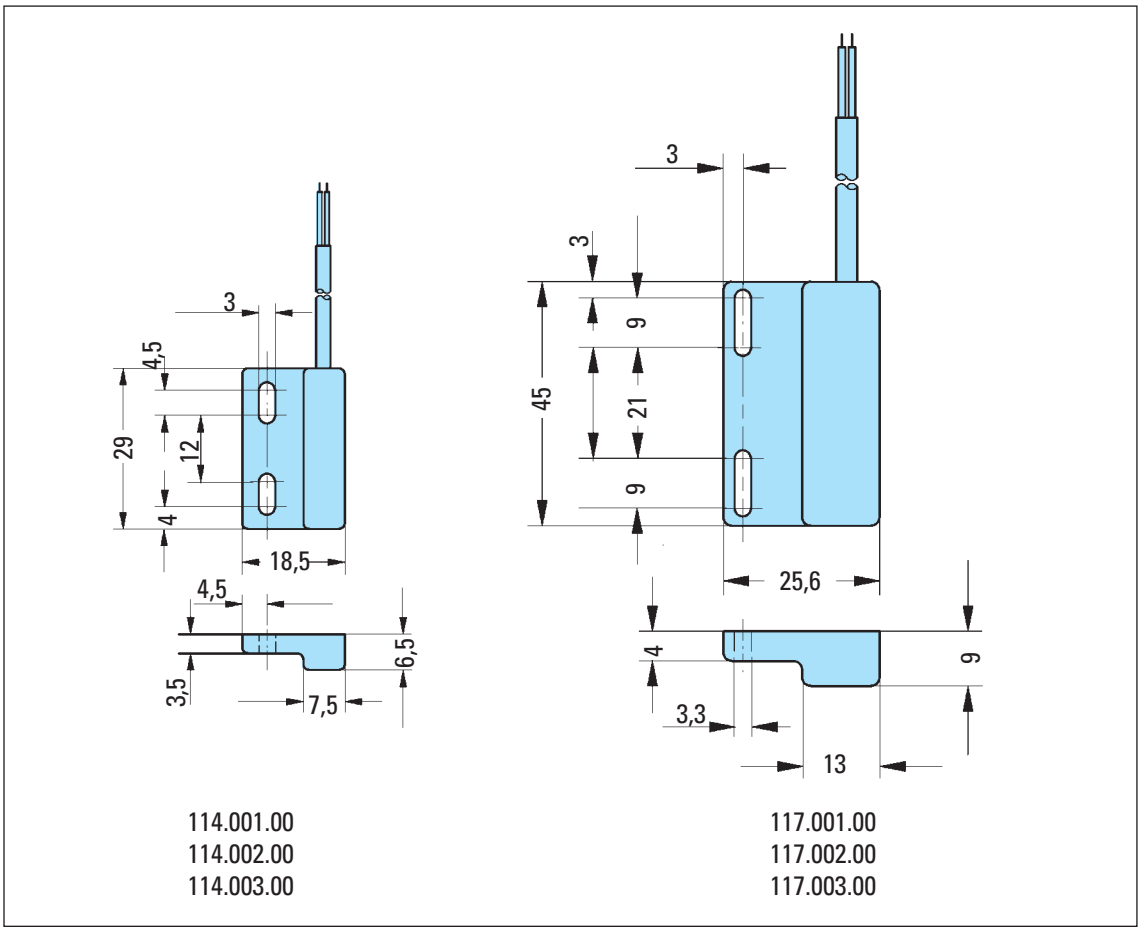

114.001.00
114.002.00
114.003.00

117.001.00
117.002.00
117.003.00

Please copy the order form, complete the list below with the desired dimensions, and then use the copy as order form.

				Type number
Connection cable	Silicone ☐	PVC ☐		
Working temperature				°C:
Switching capacity		V:	A:	VA:
Order quantity				Units:

Date .....

Ordered by .....
Company .....
Street .....
City .....

Signature .....

Mistakes and omissions excepted, subject to change without notice.

Jacob elektronische Mess- und Regelgeräte GmbH, Düsseldorfer Straße 16, D-71332 Waiblingen Tel.: 07151/568060 Fax: 07151/568079

Cradle magnetic switches

Type 107....
Type 108....

Other switching capacities upon request.

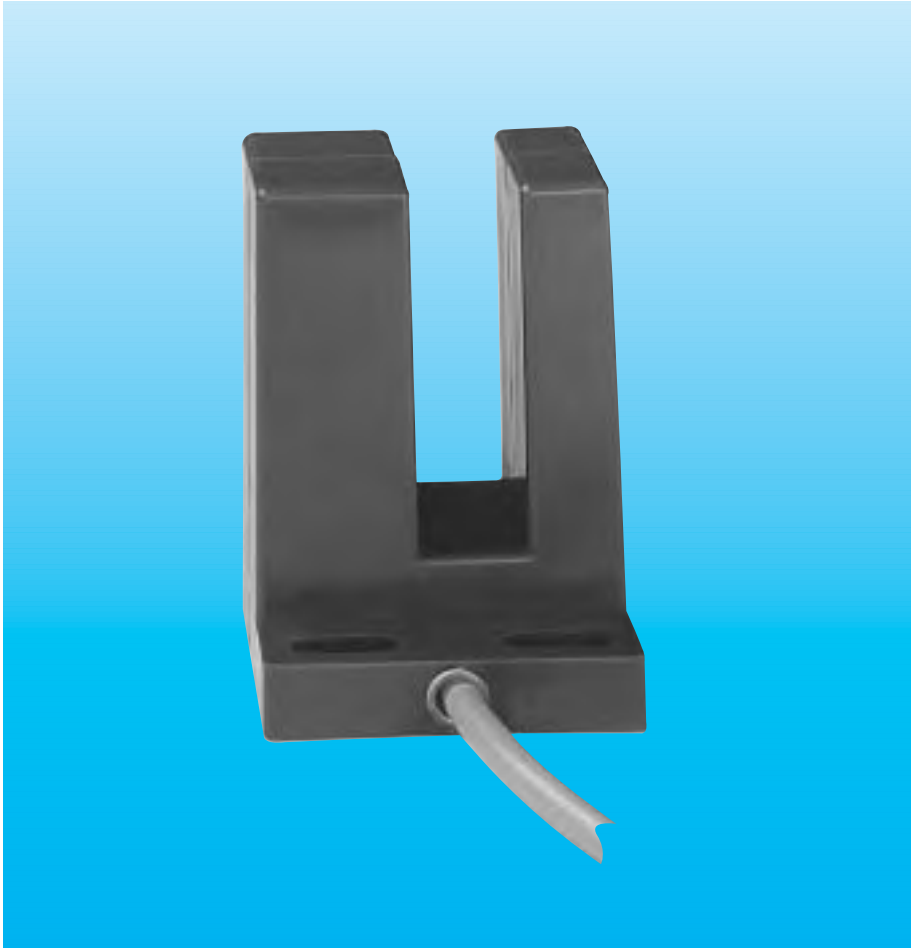

	Order ID 107.00 .00	 108.00 .00
Normally open contact	001	001
Normally closed contact	002	002
Change-over contact	003	003
Switching capacity		
Normally open contact	230 V /1,0 A / 60 VA	230 V /0,5 A / 20 VA
Normally closed contact	230 V /1,0 A / 35 VA	100 V /0,25 A / 3 VA
Change-over contact	230 V /1,0 A / 35 VA	100 V /0,25 A / 3 VA
Working temp.		
with PVC cable	90 °C	
with silicone cable	110 °C	
Connection cable	1 metre PVC or silicone 0,14 - 0,75 mm^2	

Mistakes and omissions excepted, subject to change without notice.

Order Fax

Gradle magnetic switches Type 107.... and Type 108....

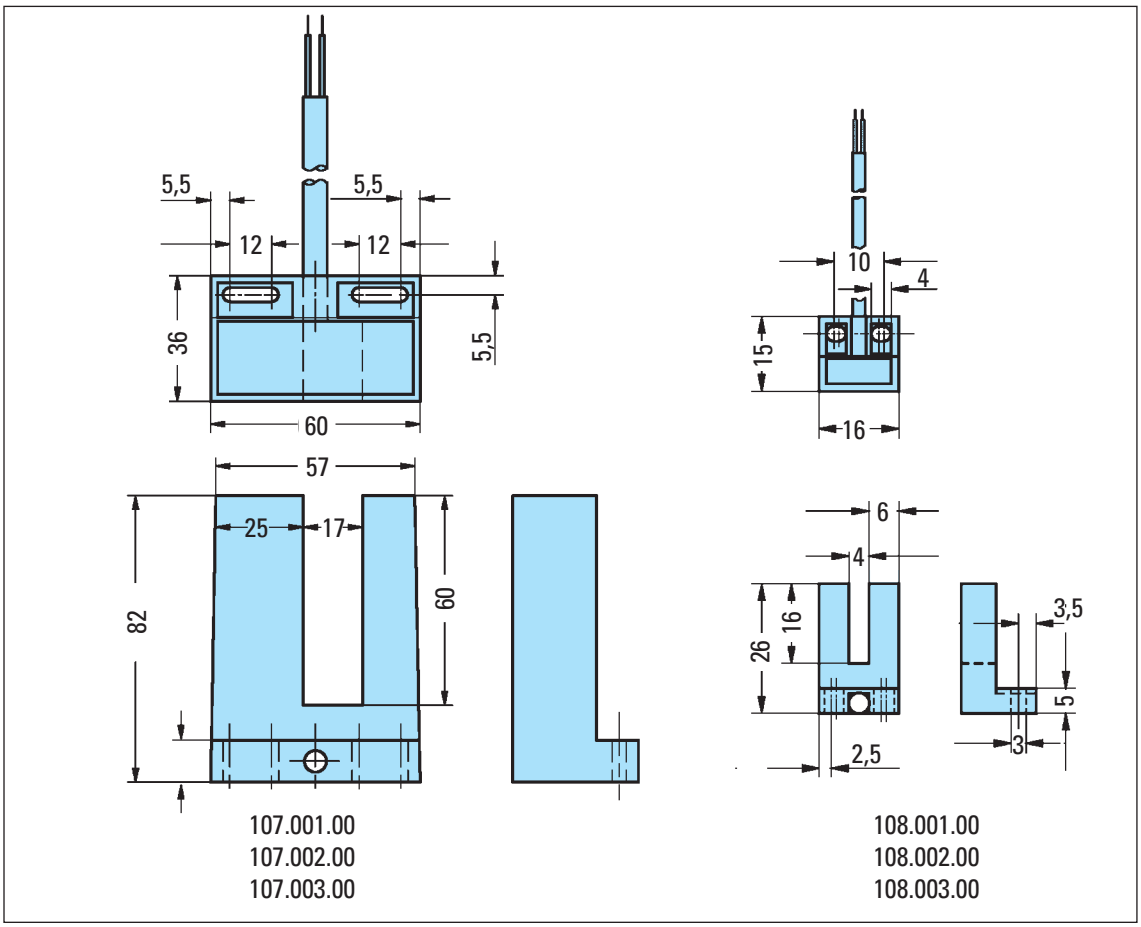

Please copy the order form, complete the list below with the desired dimensions, and then use the copy as order form.

					Type number
Connection cable	Silicone ☐		PVC ☐		
Working temperature				°C:	
Switching capacity		V:	A:	VA:	
Order quantity				Units:	

Date .....

Ordered by .....
Company .....
Street .....
City .....

Signature .....

Mistakes and omissions excepted, subject to change without notice.

Jacob elektronische Mess- und Regelgeräte GmbH, Düsseldorfer Straße 16, D-71332 Waiblingen Tel.: 07151/56806 60 Fax: 07151/56806 79

Magnetic switches
Type 116....



If bistable switching is desired, the number **"5"** is added to the order ID, e.g. **116.053.00.**
Other designs and switching capacities upon request.
See the last page for the appropriate switching magnets.

	Order ID 116.00 . 00
Normally open contact	001
Normally closed contact	002
Change-over contact	003
Switching capacity	
Normally open contact	230 V /1,0 A / 60 VA
Normally closed contact	230 V /1,0 A / 35 VA
Change-over contact	230 V /1,0 A / 35 VA
Working temp.	
with PVC cable	90 °C
with silicone cable	110 °C
Connection cable	1 metre PVC or silicone 0,14 - 0,75 mm^2

Mistakes and omissions excepted, subject to change without notice.

Order Fax

Magnetic switches Type 116....

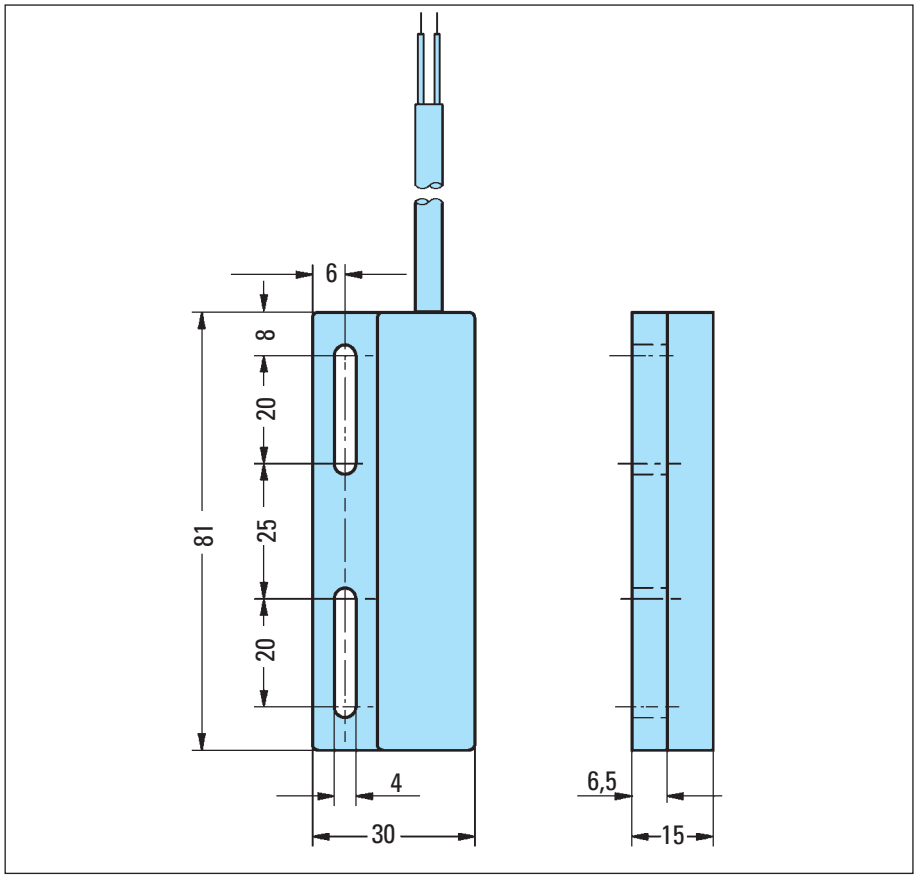

Please copy the order form, complete the list below with the desired dimensions, and then use the copy as order form.

					Type number
Connection cable	Silicone ☐		PVC ☐		
Working temperature				°C:	
Switching capacity		V:	A:	VA:	
Order quantity				Units:	

Date .....

Ordered by .....
Company .....
Street .....
City .....

Signature .....

Mistakes and omissions excepted, subject to change without notice.

Jacob elektronische Mess- und Regelgeräte GmbH, Düsseldorfer Straße 16, D-71332 Waiblingen Tel.: 07151/568060 Fax: 07151/568079

Bar magnets
Type 111....
Round magnets
Type 110....
Casing magnets
Type 103.... –117....

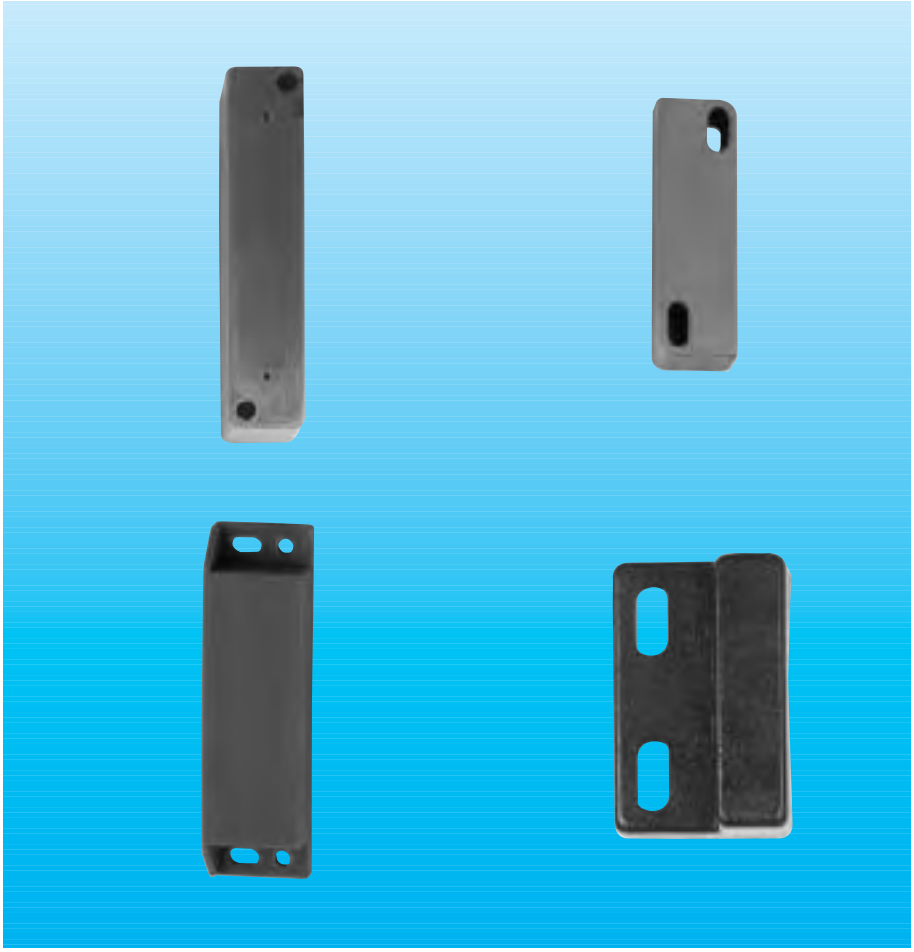

Upon request, we also offer other magnets not included in the standard program made of all commercially available magnet materials and with specific dimensions.
Other designs and switching capacities upon request.

Dimensions Bar magnets Ø x l	Order ID 111.80 □ .00
6 x 25	80 0
7 x 30	80 1
8 x 40	80 2
10 x 10	80 3
10 x 5	80 4

Dimensions Round magnets Ø x Ø x h	Order ID 110.9 □ .00	with PA protecting cap red 110.9 □ .01	with PA protecting cap blue 110.9 □ .02
15x 3,2 x6,5	9 20	9 20	9 20
20 x 4,3 x 6,5	9 00	9 00	9 00
20 x 4,3 x 10	9 01	9 01	9 01
30 x 5,5 x 15	9 02	9 02	9 02

Casing magnets	Order ID 103.800.00	104.800.00	105.800.00	106.800.00	109.800.00	114.800.00	116.800.00	117.800.00
See drawing for dimensions.								

Mistakes and omissions excepted, subject to change without notice.

Order Fax

Casing magnets Type 103.... to 117....

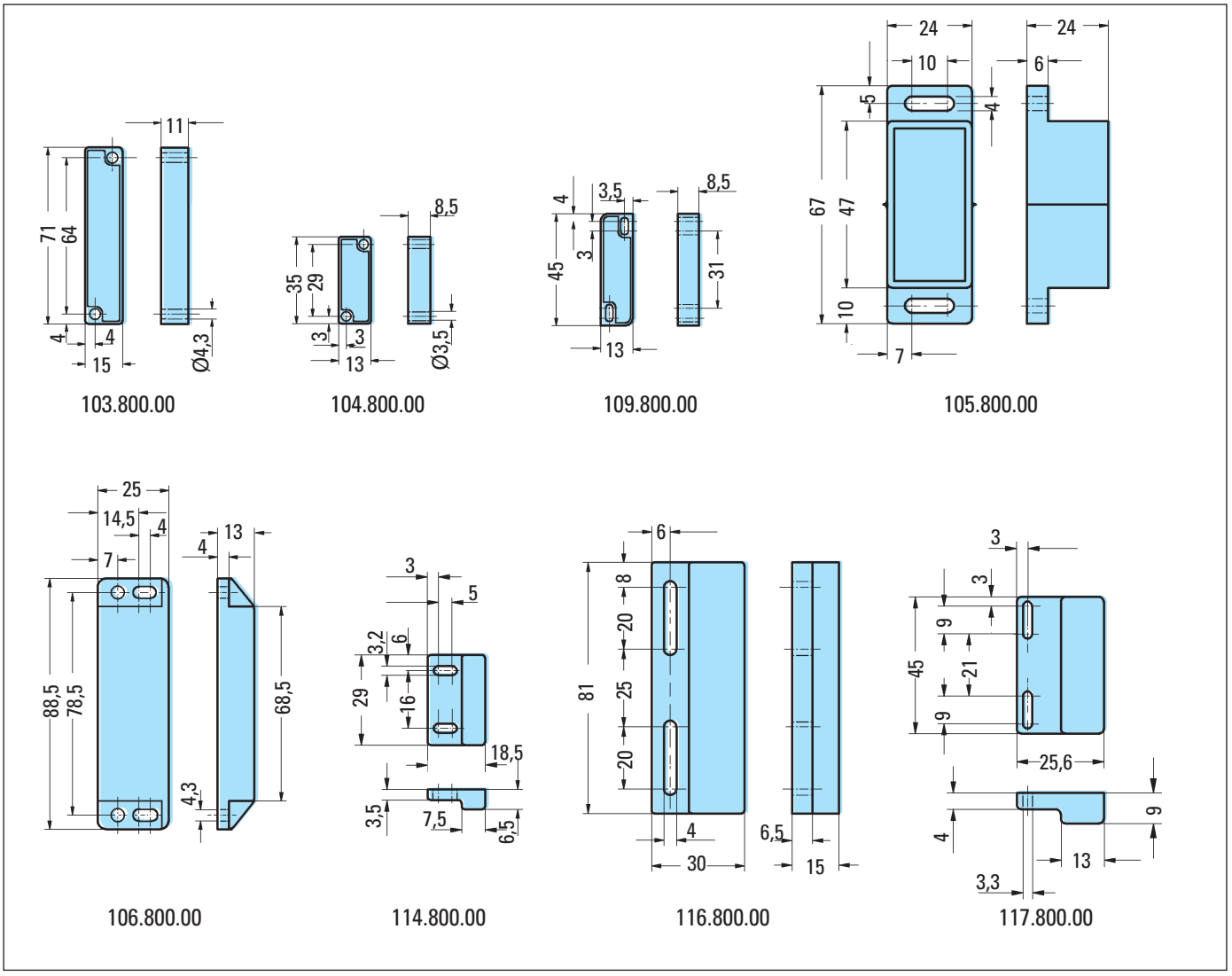

Please copy the order form, complete the list below with the desired dimensions, and then use the copy as order form.

	Type number
Order quantity	Units:

Date .....

Ordered by .....
Company .....
Street .....
City .....

Signature .....

Mistakes and omissions excepted, subject to change without notice.

Jacob elektronische Mess- und Regelgeräte GmbH, Düsseldorfer Straße 16, D-71332 Waiblingen Tel.: 07151/568060 Fax: 07151/568079

Switching magnets
Type 105....



Upon request, we also offer other magnets not included in the standard program made of all commercially available magnet materials and with specific dimensions.
The switching magnets of the type series 105… are available with the polarization specified overleaf. All other switching magnets are magnetized on the face (axial).

Switching magnets	Order ID			
	105.800.00	105.900.00	105.910.00	105.911.00
See drawing on previous page for dimensions.				

Mistakes and omissions excepted, subject to change without notice.

Order Fax

Switching magnets Type 105....

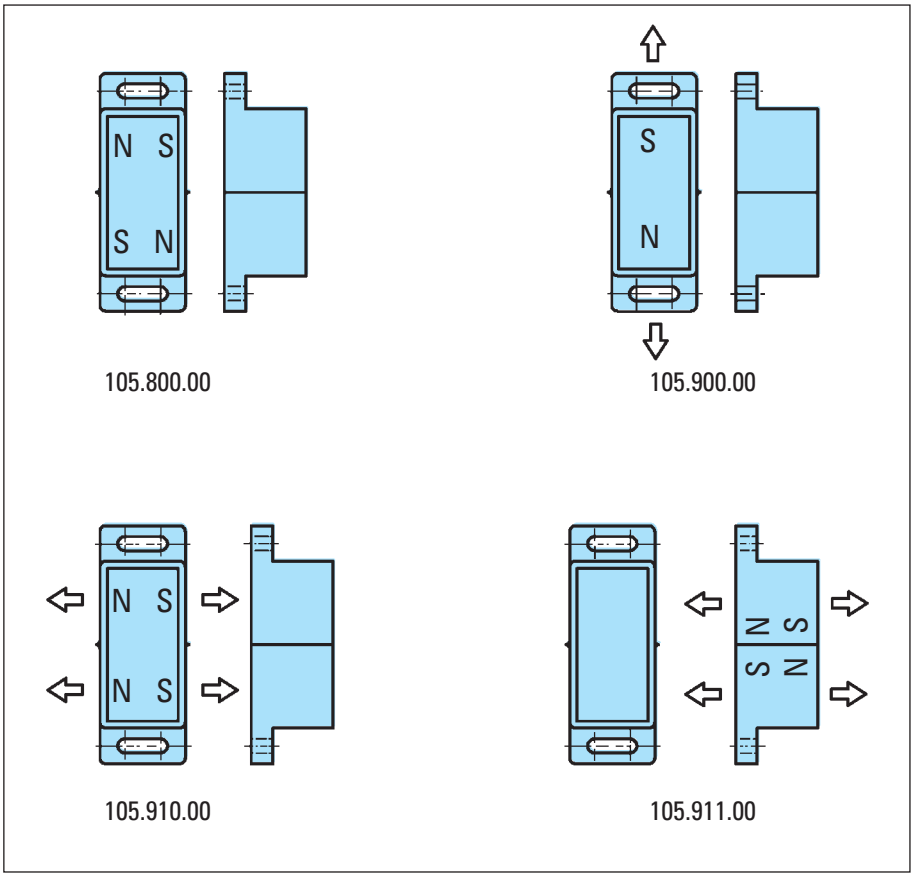

Please copy the order form, complete the list below with the desired dimensions, and then use the copy as order form.

	Type number
Order quantity	Units:

Date .....

Ordered by .....
Company .....
Street .....
City .....

Signature .....

Mistakes and omissions excepted, subject to change without notice.

Terms of sales, delivery and payment

1. **Orders:** With respect to any and all offers and orders, only the following conditions apply. Deviations therefrom are subject to our express written consent. Different conditions of the customer are in no way binding for us, even if the customer excludes the validity of our terms in his conditions of purchase and we do not file an objection against that. This also applies to all subsequent offers and orders. With respect to the purchase order and the extent of delivery, our written acceptance of order shall prevail. Oral agreements only become binding by our written acknowledgement.

2. **Prices:** All prices are understood for deliveries ex factory, exclusive packaging. For small-volume purchases below 60 €, a markup for small-volume purchases (service charge) amounting to 20 € will be charged, if the accumulation with other purchases is not possible.
Carriages accruing at the destination, shall in any case be borne by the recipient.

3. **Period of delivery:** The period of delivery begins with the date of the acceptance of order. It is deemed to be complied with if the consignment is ready for shipment and this is communicated to the customer within the time limit. Part deliveries are admissible. The period of delivery applies subject to unpredictable obstacles which are beyond the will of the supplier, especially in cases of act of God, equipment failures, difficulties in the material and energy supply. If these events substantially affect the timely performance of the agreement, the periods of delivery are reasonably extended. Furthermore, such events entitle us to cancel the contract in part or in whole which does, however, not entitle the customer to claim for damages. Annulments can only be made with our consent.

4. **Shipment** is always performed at the risk of the recipient, also if free-of-charge delivery is agreed upon. We do not assume any liability for damages, breakage or loss of the goods during transportation. The costs for the transport to the railway shall be borne by the customer.

5. **Payment** is to be made within 14 days from the date of invoice with 2% discount or within 30 days net. If the period of payment of 30 days is exceeded, interests on defaulted payment amounting to 2% above the bill discount rate are charged, subject to further damage caused by delayed performance. Terms of payment deviating from the above must be confirmed in writing.
In case of payment with bills of exchange, which are accepted only upon previous agreement, the buyer bears the costs, especially discount and collecting charges. Payments with bills of exchange are not discountable.
Bills of exchange and cheques are not deemed a payment until encashment and are accepted by us only with the usual reservation.

6. **Complaints:** Deficiencies which are provably to be attributed to conditions before the passage of risk, are to be communicated to the supplier in writing within 14 days from receipt of the goods. In case of defective delivery, a substitute delivery or credit note will be performed after the return of the goods, whereby we choose which action to take. We do not accept cost of rework in foreign companies. Claims for damages exceeding the framework of redhibitory defects are excluded, without consideration of the corresponding legal foundation (e.g. consequential damages). Any and all returns are subject to our consent. Such returns are to be directed to our plant at Düsseldorfer Strasse 16, D-71332 Waiblingen, or via railway to Station 71332 Waiblingen 1220 (consignment to be called for at the railway station).

7. **Reservation of ownership:** The delivered goods remain in the ownership of the seller until the complete payment of the purchase price and until the payment of all previous and future deliveries in the framework of the business relationship - including all subsidiary claims. Up to that time, the buyer is not entitled to pledge the goods to third parties or to transfer them by way of security. As far as the buyer processes or transforms the goods, the seller is the manufacturer according to § 950 HGB and acquires ownership of the intermediate and final products. The buyer only acts as depositary. He is, however, entitled to sell the goods or the product created therefrom in the proper sales procedure. He assigns any and all claims arising out of the resale or another legal fact against third parties, also if the goods are processed and up to the purchase price, to the seller by way of security.
The buyer is obliged to communicate any possible access by third parties to the goods delivered with reservation of ownership or to the assigned claims immediately to the seller.
The goods under reservation of ownership are to be treated carefully and are to be insured against fire and water damages. Insurance claims in the insured event are to be assigned to us.
If the security created by the reservation of ownership exceeds the claim to be secured by 25%, the seller will release completely paid deliveries at his own option.

8. **Place of fulfilment and jurisdiction:**
Place of fulfilment for the payment is Kernen (Rems-Murr-Kreis). Place of fulfilment for deliveries is Waiblingen (Rems-Murr-Kreis).
Place of jurisdiction is the seat of the court of record of competent jurisdiction for the seller (district court Waiblingen).
All legal relations arising out of the deliveries are exclusively subject to the laws of the Federal Republic of Germany.

JACOB elektronische Mess- und Regelgeräte GmbH

Notes

Jacob elektronische Mess- und Regelgeräte GmbH
Verwaltung und Produktion:
Düsseldorfer Straße 16
71332 Waiblingen
Telefon 0 71 51 / 5 68 06-60
Telefax 0 71 51 / 5 68 06-79
E-Mail jacob@jacob-gmbh.de
http://www.jacob-gmbh.de